CDI CAD Documentation Package

Student Documentation Package- Example

Student name: ***** *******

Class- CDI 070

Instructor name: Louis Gary Lamit - Spring 2010

Project/Lesson/Exercise

Lesson 1

Pin: This part was modeled from one circle sketch and one Extrude feature. Despite the part's simplicity, it may be difficult for beginners to understand the interface of Pro/Engineer Wildfire 5.

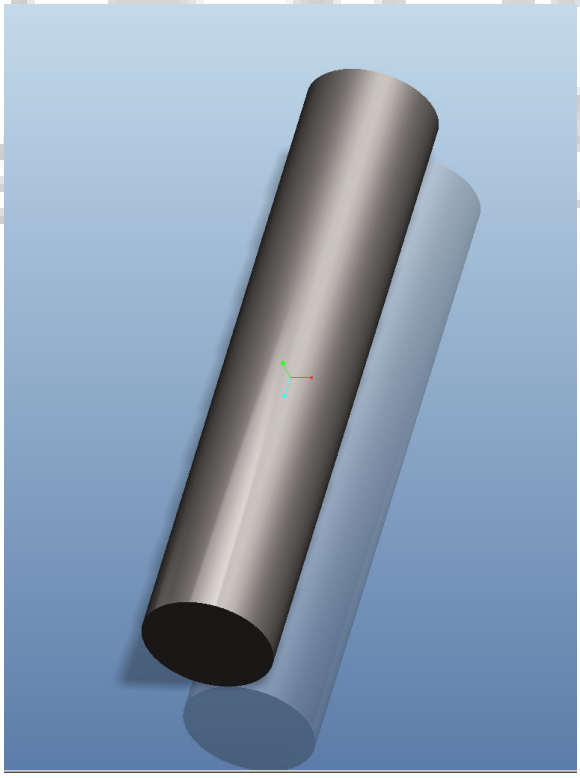

Plate: The first Extrude feature of this part uses an octagon sketch, which has to be obtained from the Sketcher Palette. The Hole feature is aligned with the Right and Top datum planes so that it goes through the middle of the Plate.

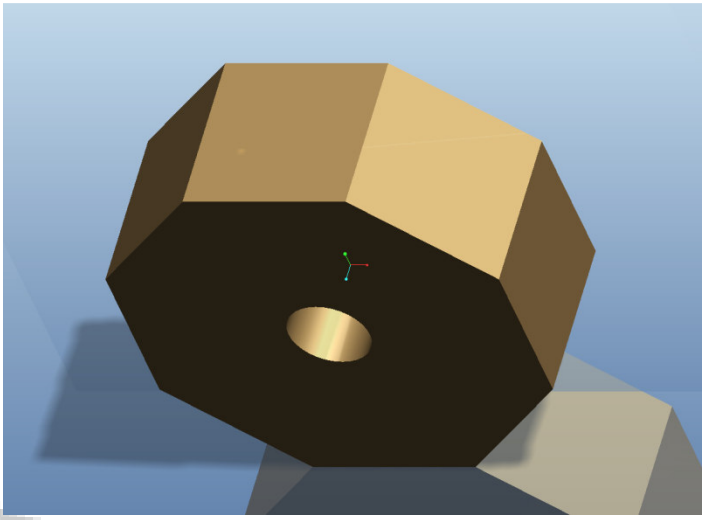

Connector Assembly: The Plate part is fixed to the center of the assembly. The outside surface of the Pin is coincident to the inside surface of the Plate's hole. The front surfaces of the plate and pin are offset from each other at a certain distance.

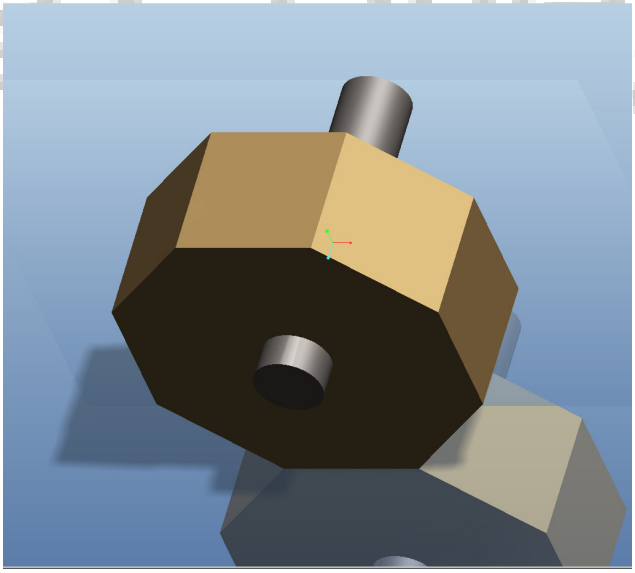

Connector and Plate Drawings: The first drawing is for the assembly and the second drawing is for the part. Without detailing, the two drawings seem similar. Later in the textbook, assembly drawings will include Bills of Materials while part drawings include dimensions.

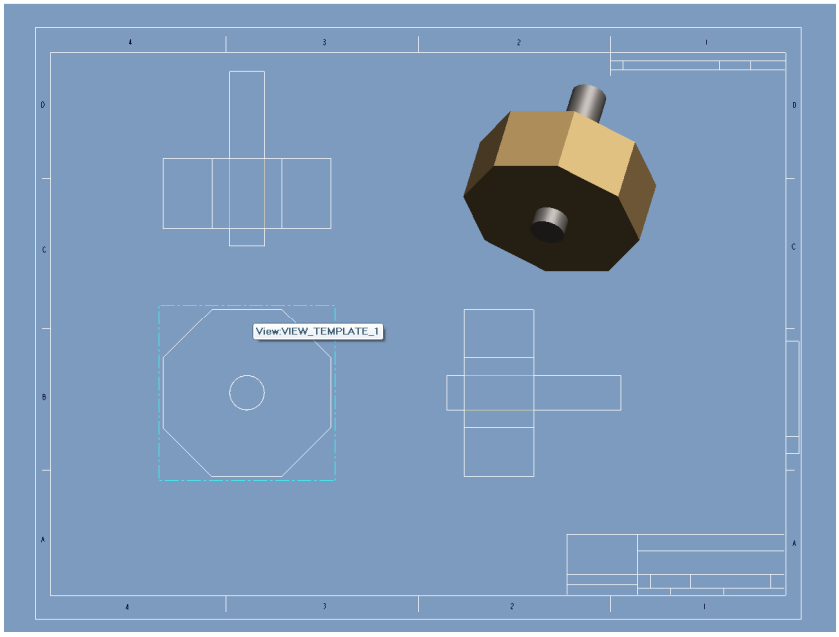

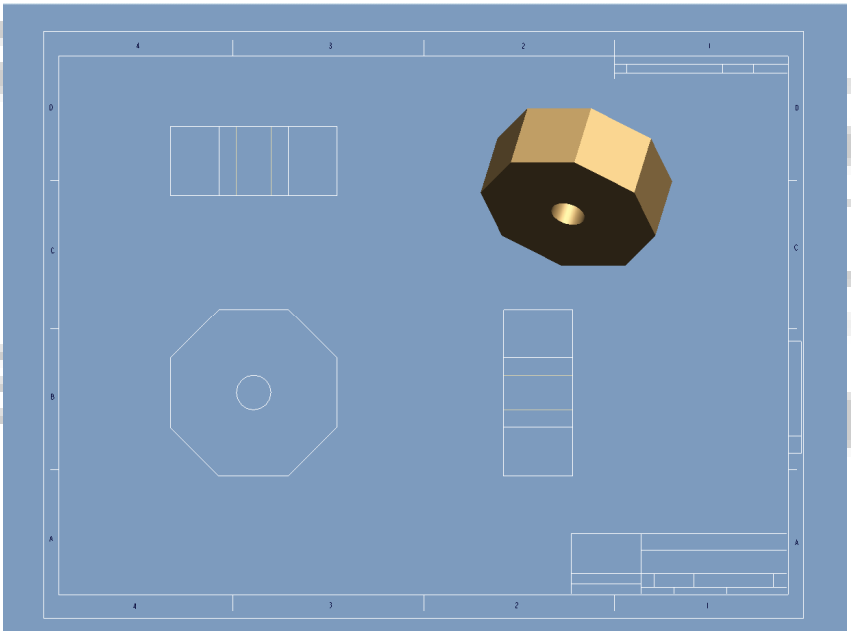

Lesson 2

Downloaded Clamp Arms: The first downloaded part from the Hytec catalog has one imported feature that is not the same as Pro/E features. The second downloaded part from www.cad-resources.com is modeled with Pro/E features and can be edited. For the purpose of this lesson, these parts are used to practice using Pro/E's user interface.

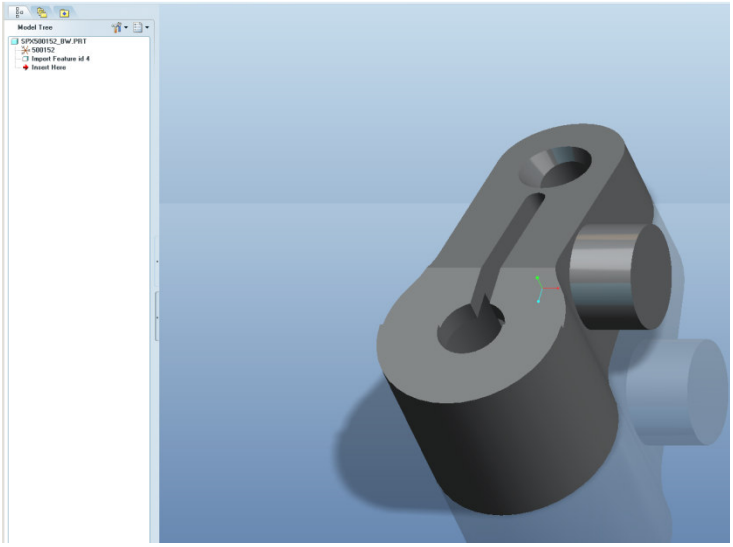

Hytec Part

Editable Part from CAD Resources

Lesson 3

This lesson involves ten simple parts that are modeled using a variety of features. Many of these features, especially rounds and chamfers, will be used again in future lessons.

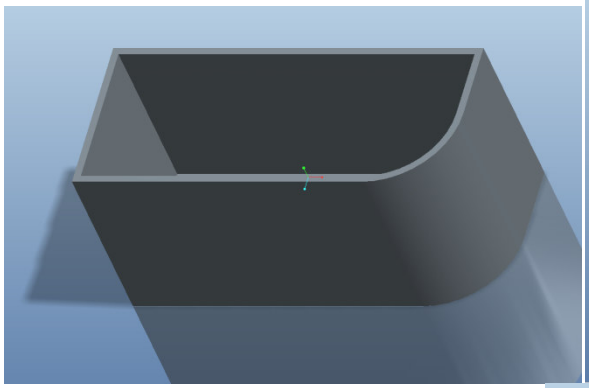

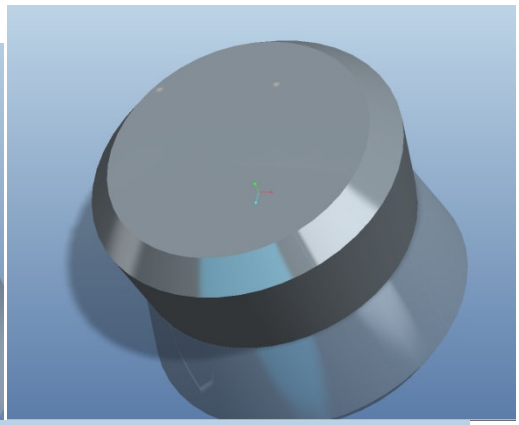

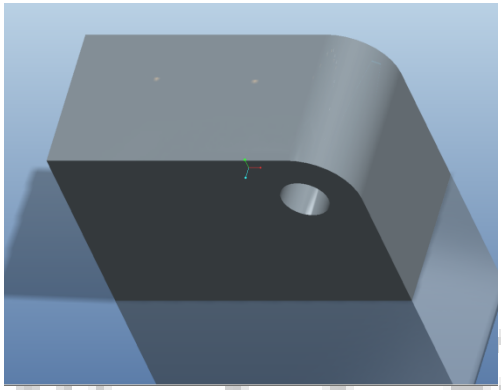

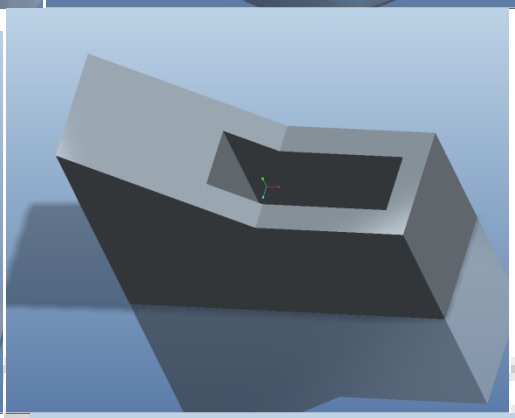

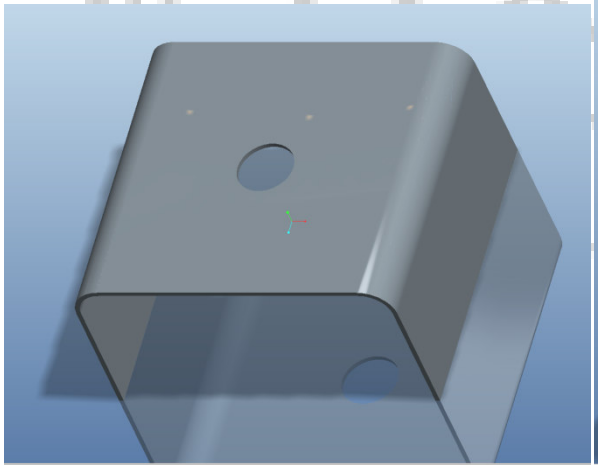

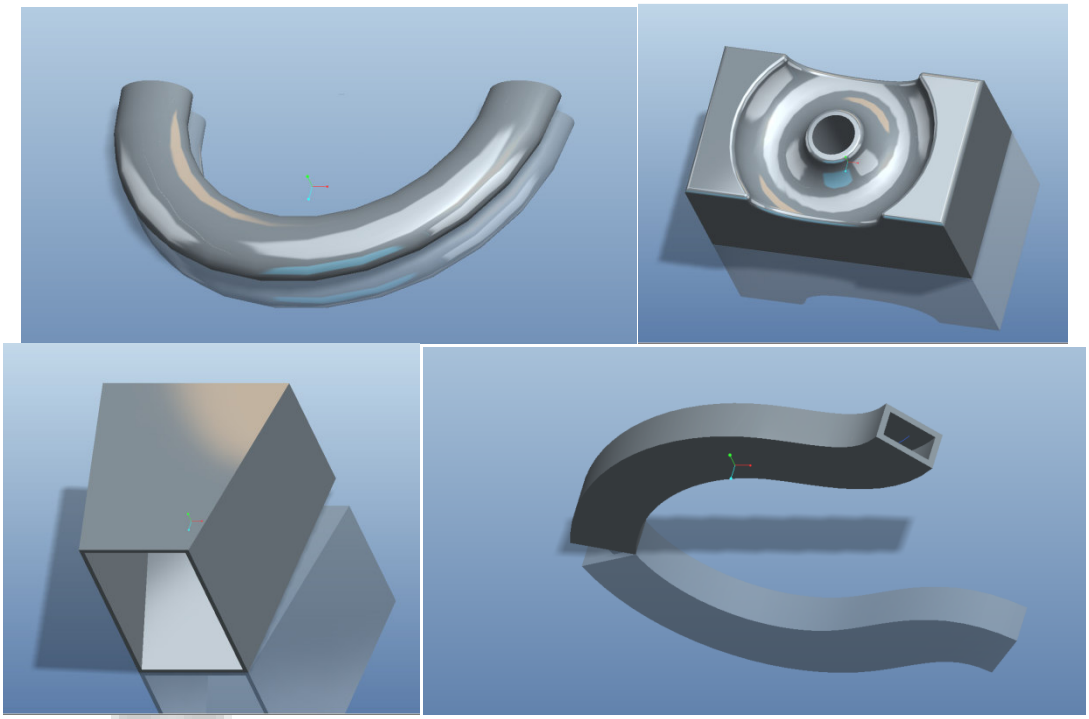

Lesson 4

Clamp: The Extruded Base sketch requires the use of symmetry constraints via a centerline. The Extruded Cut reuses the first sketch because the cut uses the same dimensioning scheme, though with a different size. The mirror tool is used to mirror a cut across the Right Datum plane.

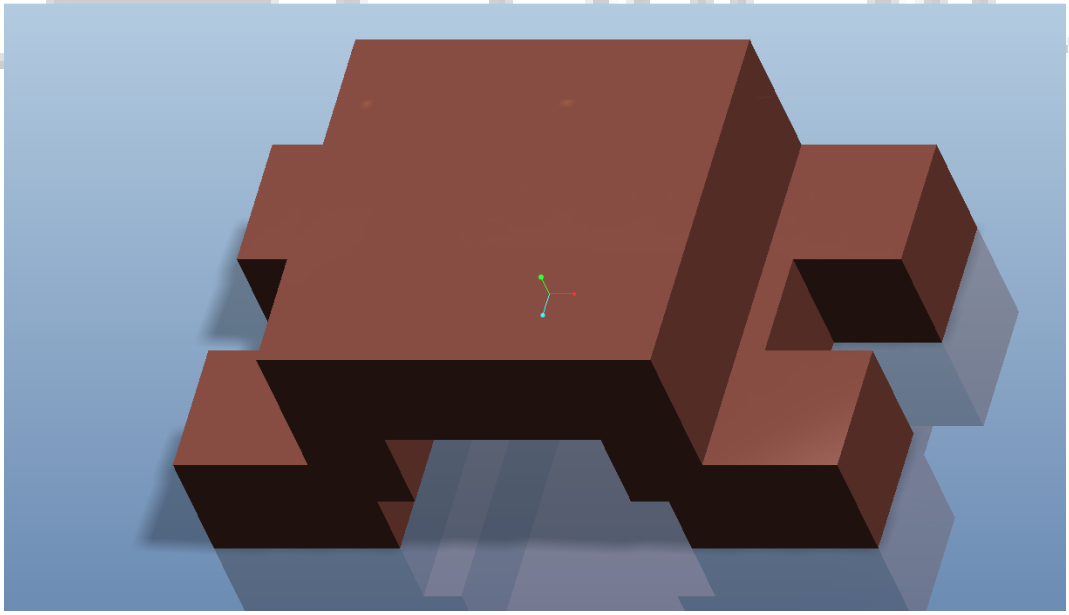

Lesson 5

Anchor: This part uses references such as extra datum planes and axes to create features in unusual locations. Such features include a hole that is parallel to an angled surface, a hole that uses the same axis as the arc of the first sketch, and a cut that is symmetric about an extra datum plane. The extra datum plane also has a relation to keep it in the center of the upper portion of the part.

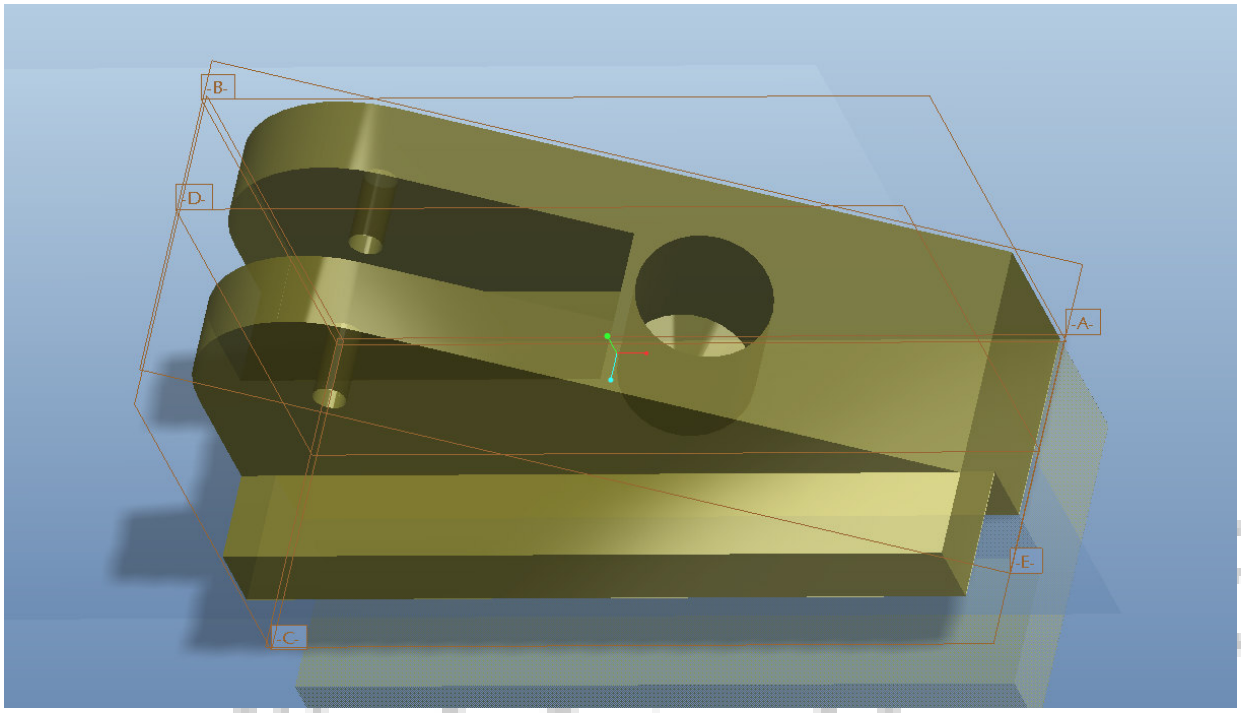

Lesson 6

Clamp Foot: This part, as well as the other parts in this lesson, is modeled with the Revolve feature. Revolved features require a centerline as an axis of rotation and Revolved bases require closed sketches. The sketch for the revolved cut is saved as another file so that it can be reused.

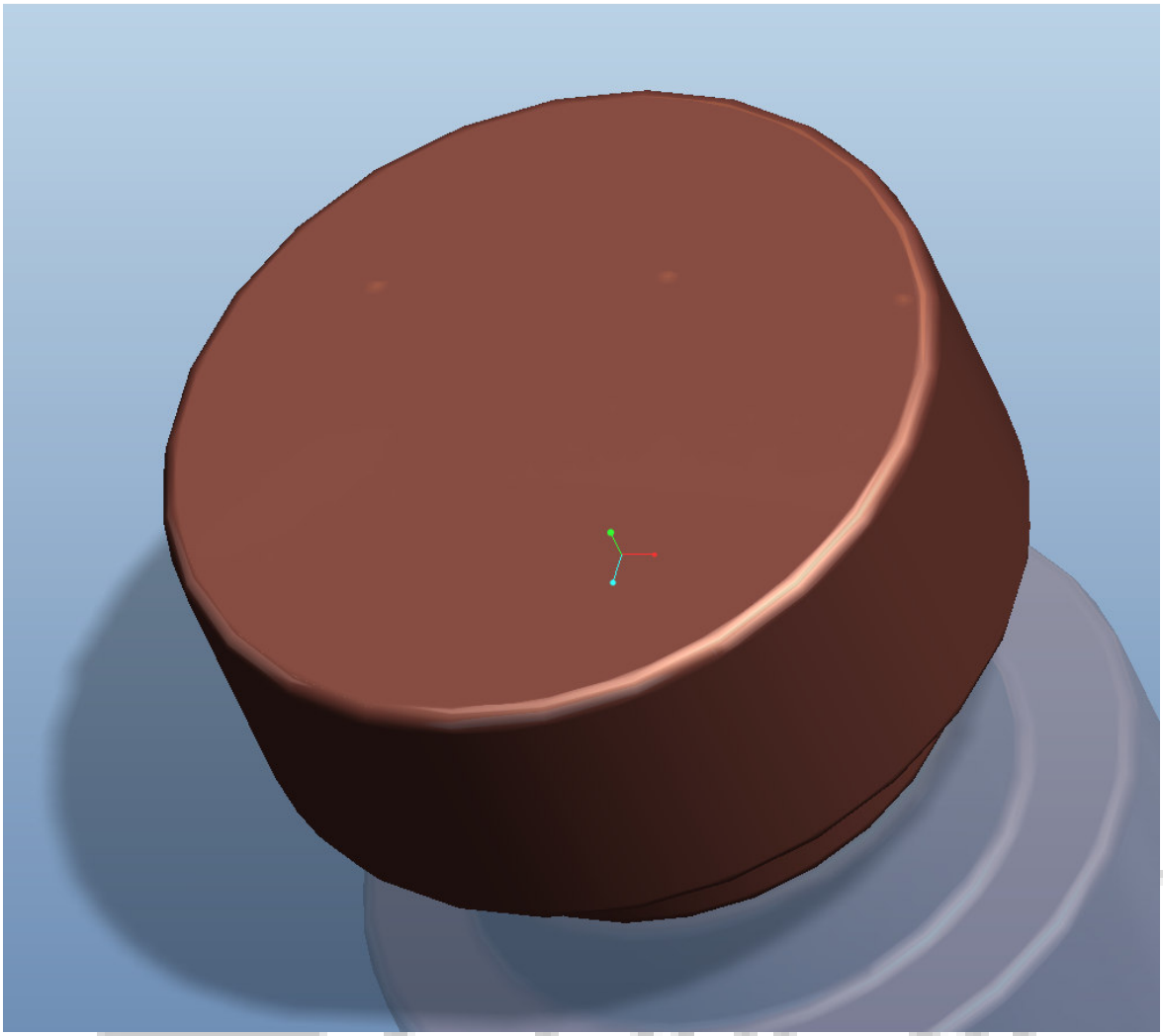

Clamp Ball: The Revolved base reuses the previous saved sketch via the Sketcher Palette. A countersunk hole with a thread is located on the flat surface.

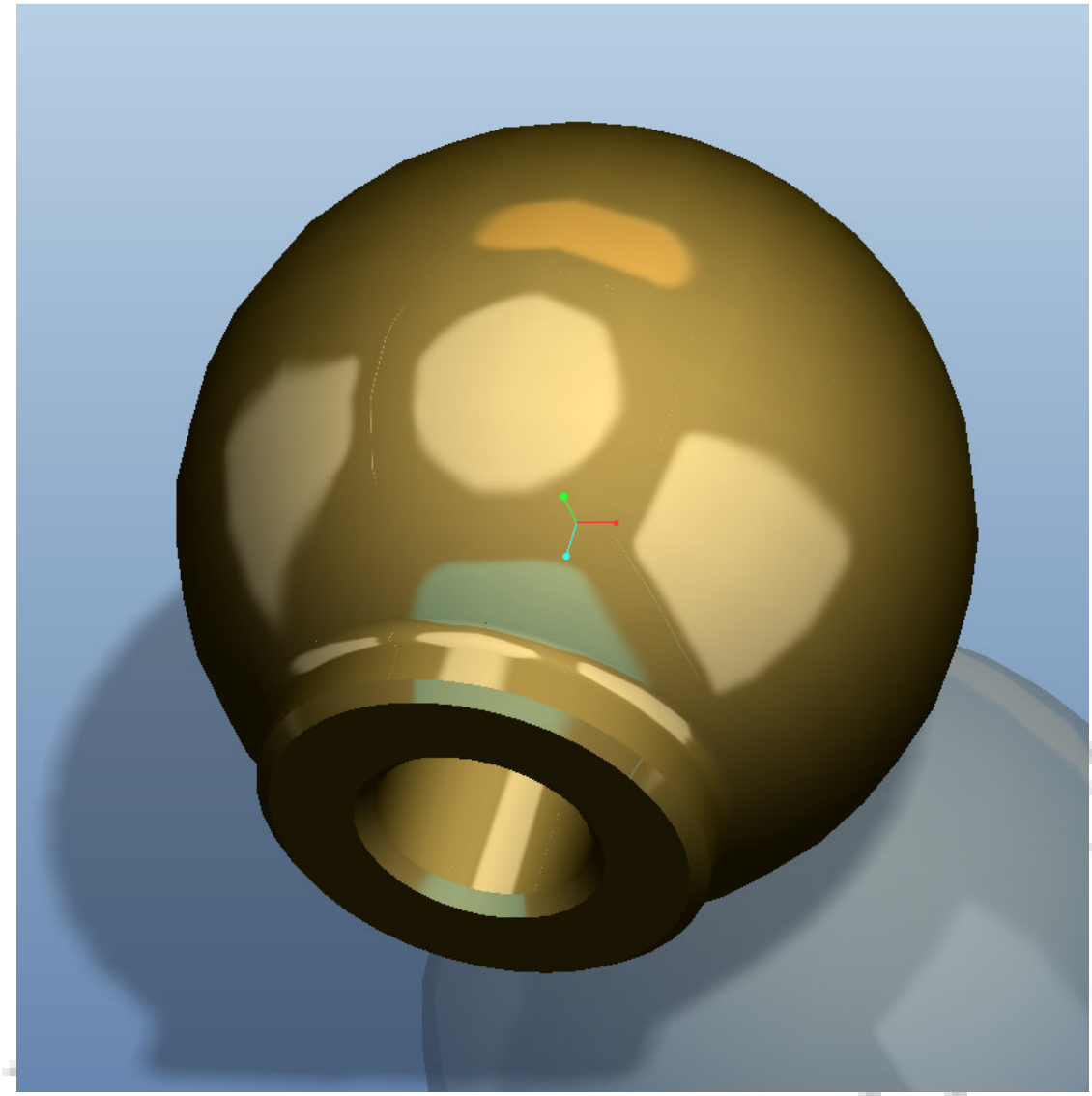

Clamp Swivel: The first sketch is fairly complicated, so it is important to have the correct dimensioning scheme and to fully define the sketch in order to avoid unwanted weak dimensions. There is a cosmetic thread on the long cylindrical surface.

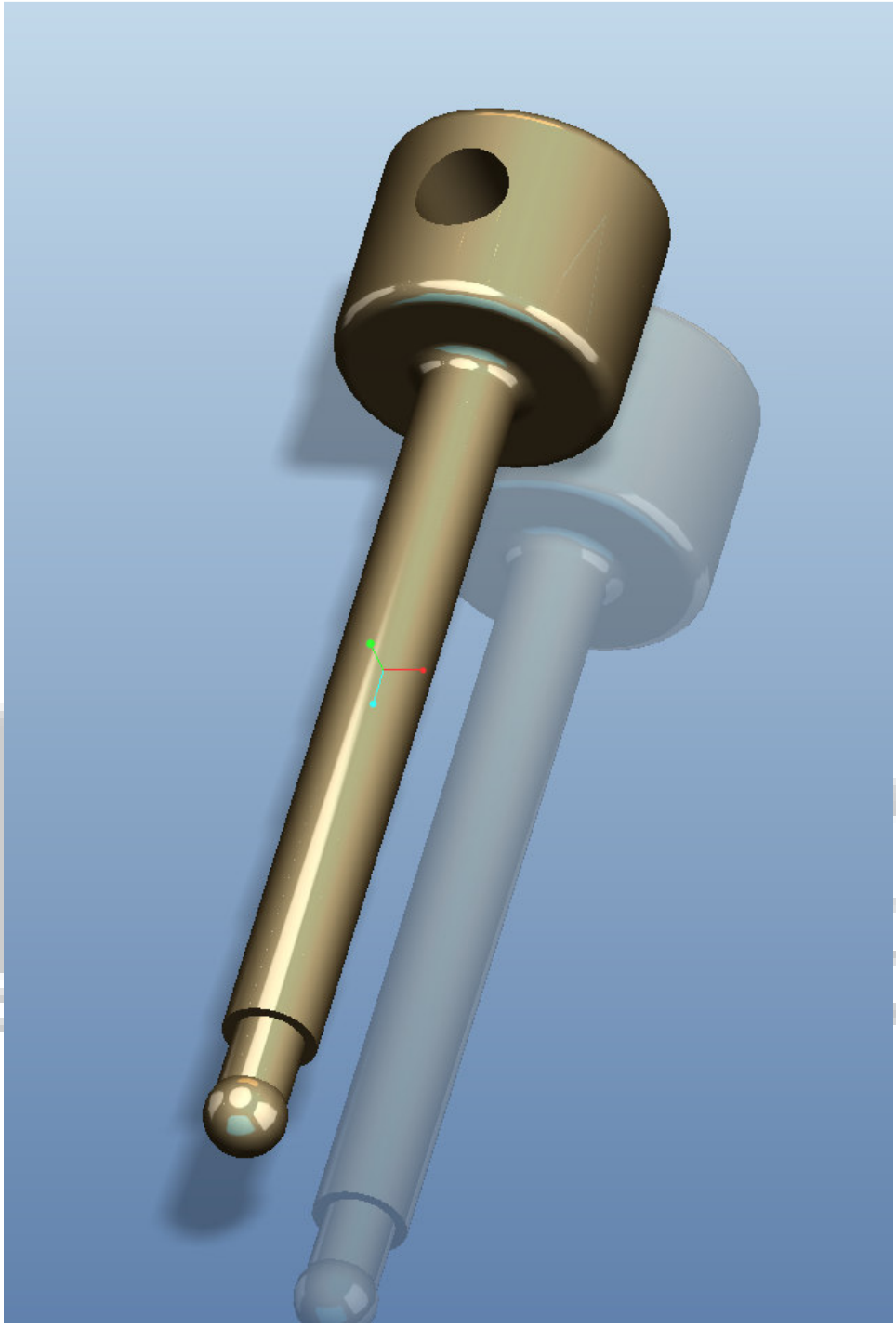

Lesson 7

Clamp Arm: The second cylindrical base extrude is created by using copy and paste special on the first base extrude. Many of the sketches require one to select other edges and surfaces as references. The machined cuts and web require extra datum planes to make them on. The profile rib

is created using the surfaces first three extrusions as references. There is a Family Table that shows different instances, such as the casting and the machined part.

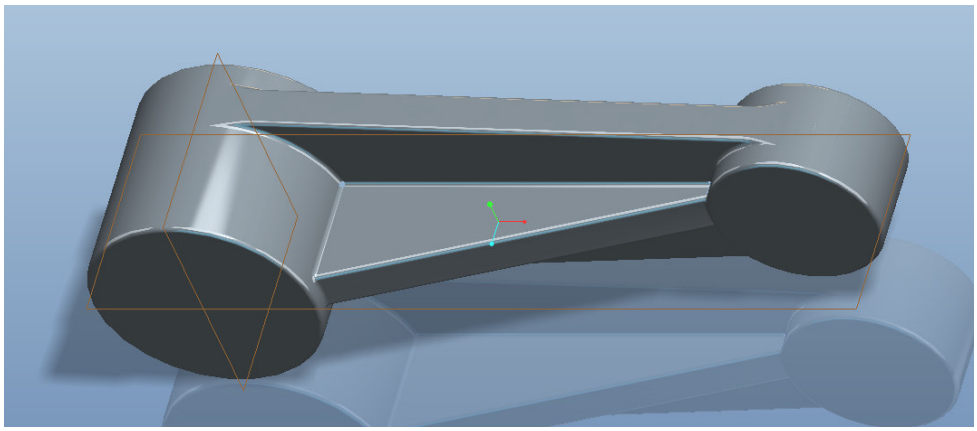

Casting

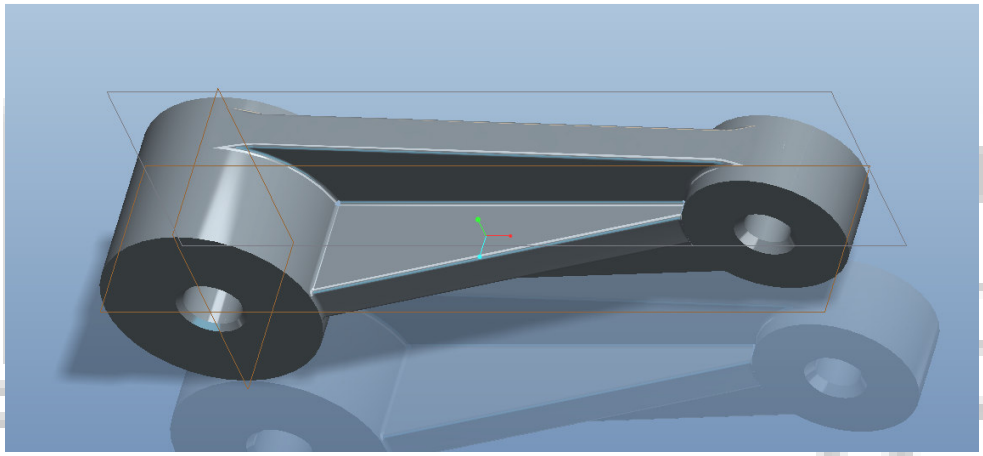

Machined Part

Lesson 8

This assembly requires three downloaded parts from the Carr Lane website in addition to the parts created in Lessons 6 and 7.

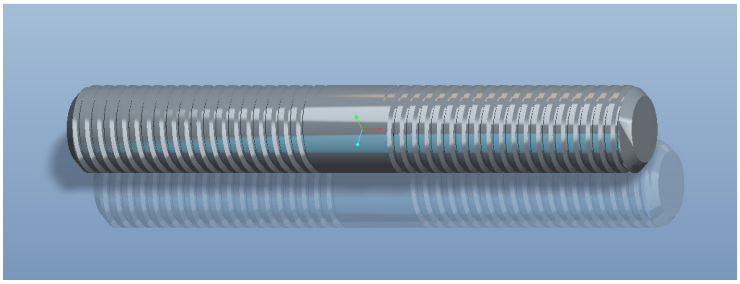

.500-13 X 3.50 DOUBLE END STUD

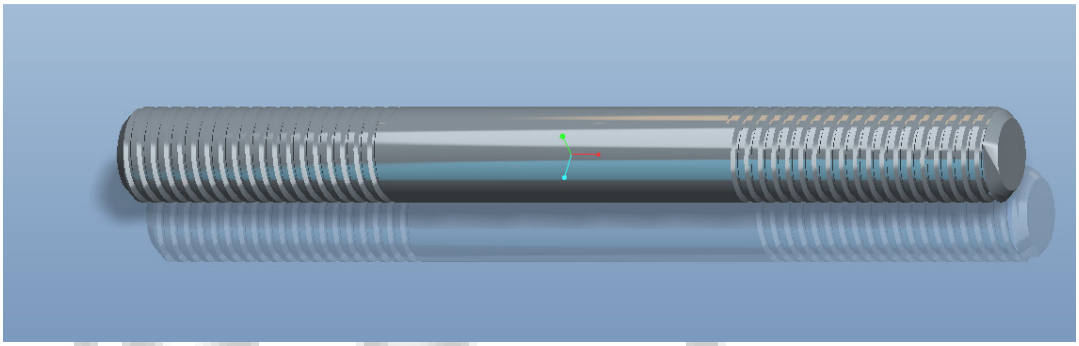

.500-13 X 5.00 DOUBLE END STUD

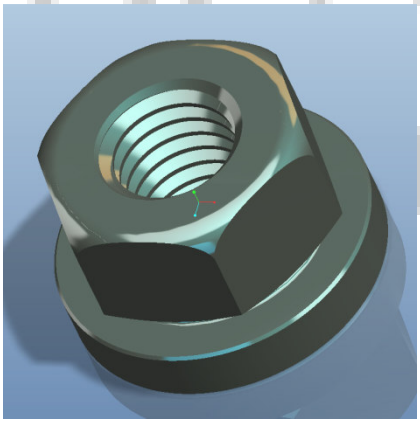

.500-13 X HEX FLANGE NUT

Clamp Subassembly: Starting with the Clamp Arm, the components are placed into the assembly and are attached to each other through coincident and offset constraints. This method is known as bottom-up design because existing parts are assembled one by one. One of the Clamp Balls is actually copied and pasted from the other one.

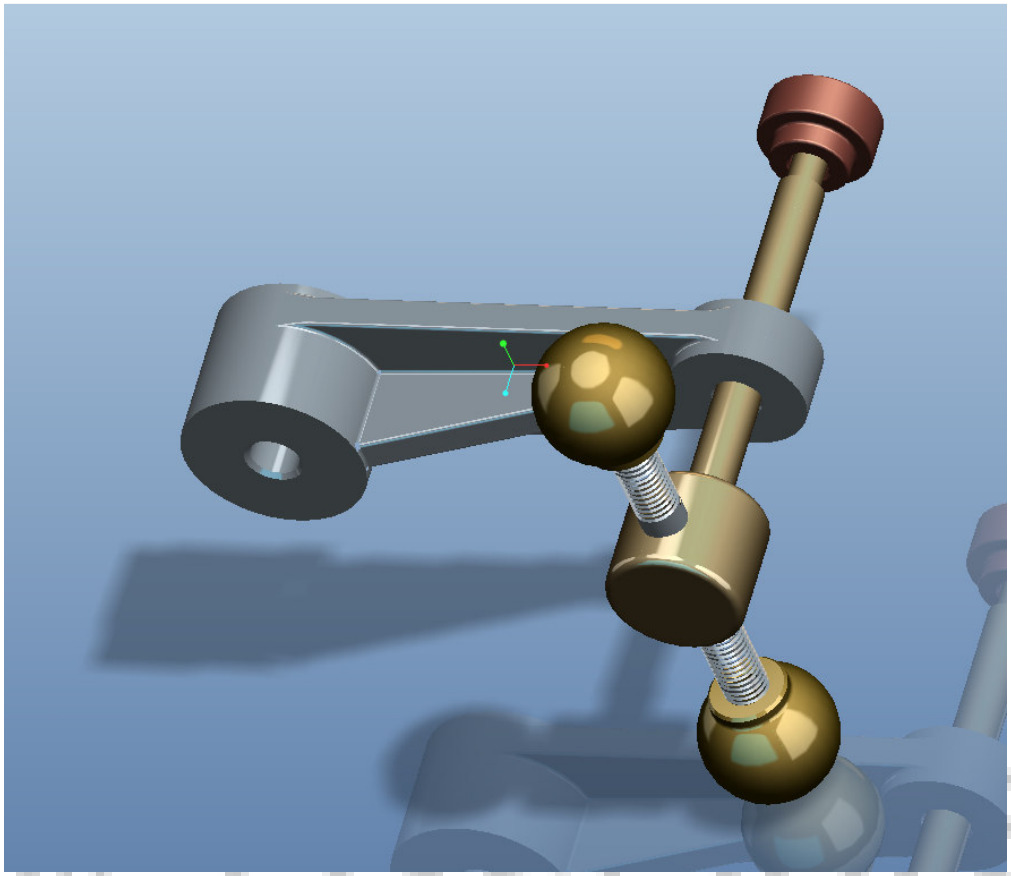

Clamp Assembly: The main assembly is created through top-down design. The first component, the plate, is created in assembly mode. The plate has a threaded hole and four counterbore holes that are patterned using the part datum planes as references. The holes have to be made while the plate part is active, otherwise the holes will be assembly features instead of part features. When the flange nut is added to the assembly, the thread surfaces of the stud and nut have to be selected carefully for contraining.

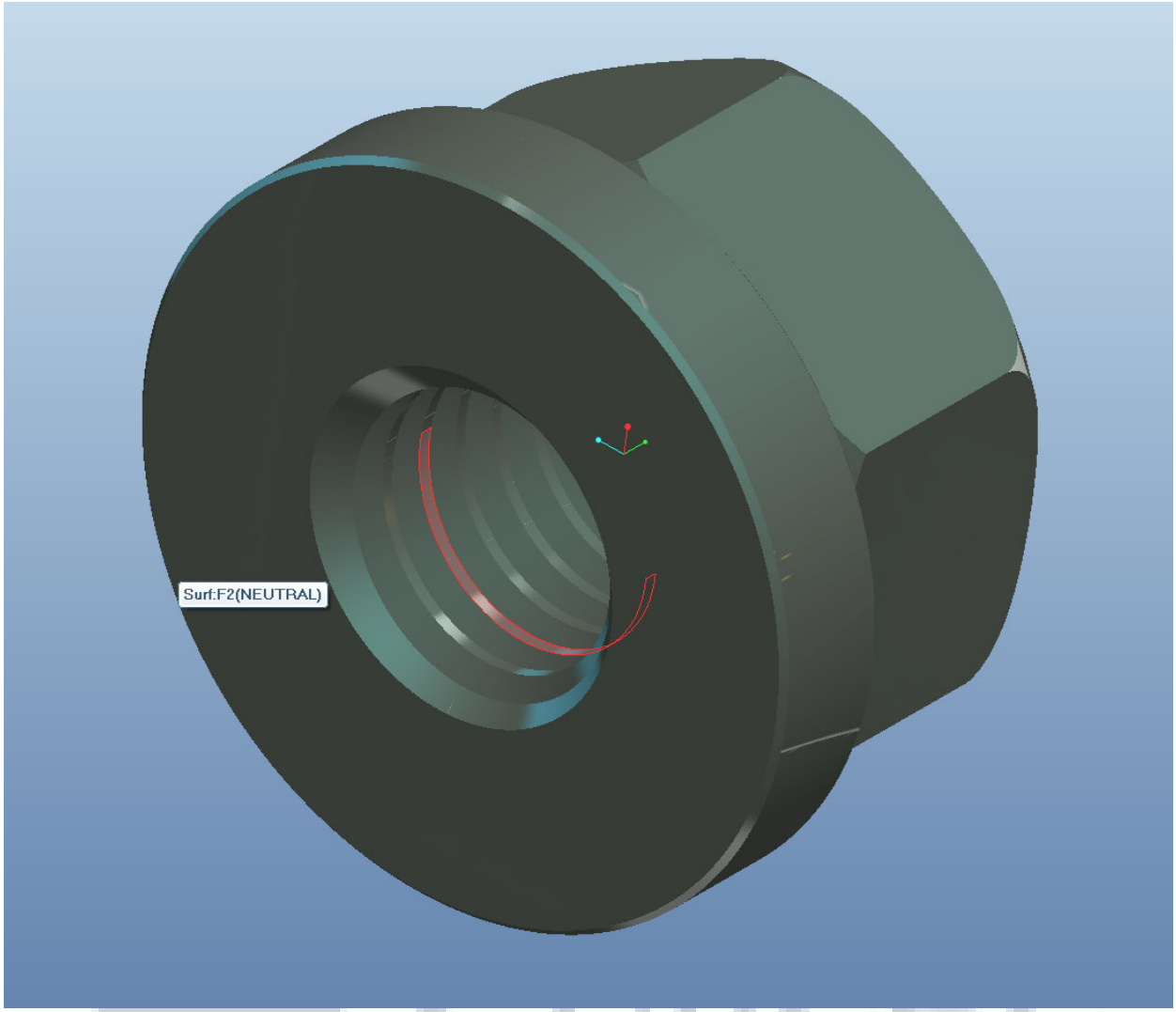

Selected Thread Surface

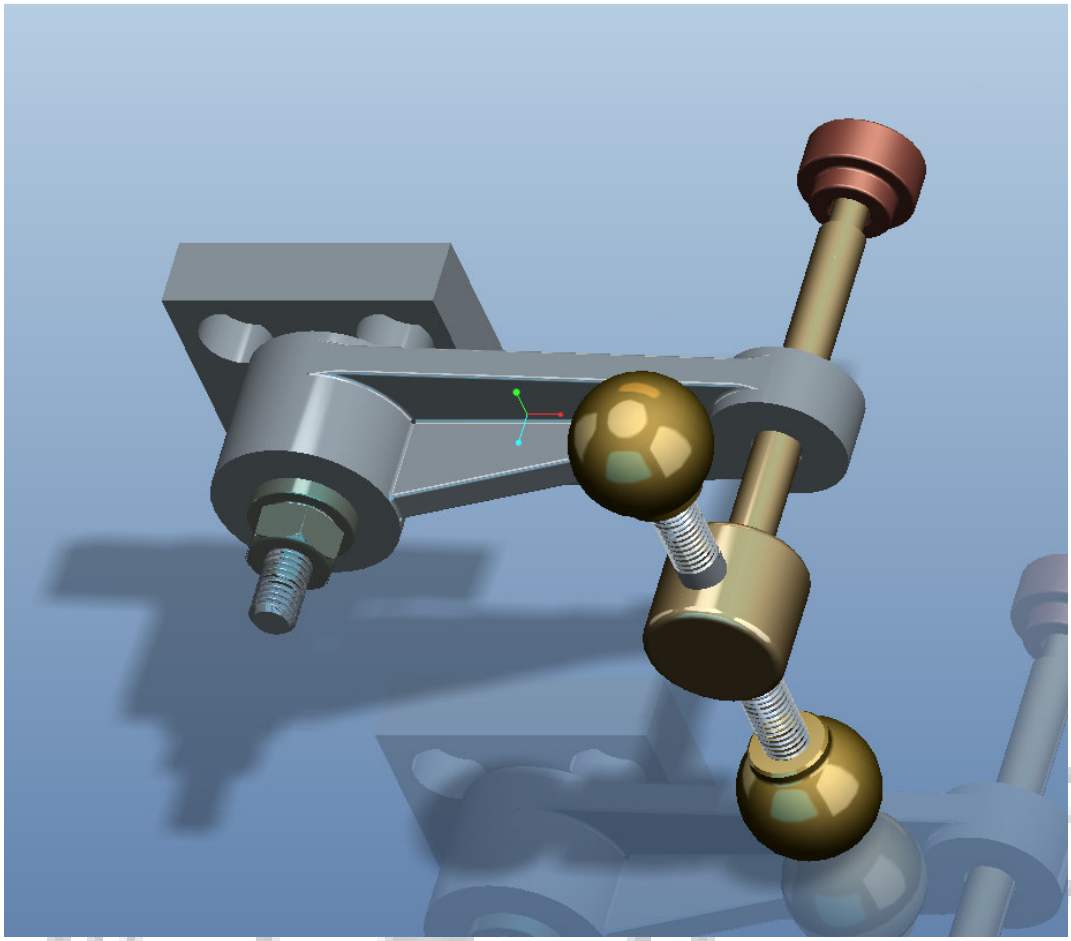

Main Assembly

Lesson 9

The model from Lesson 8 is used to practice making views, such as the perspective view, reoriented views, and exploded views. In the exploded view, parts are moved away from each other, including parts in subassemblies.

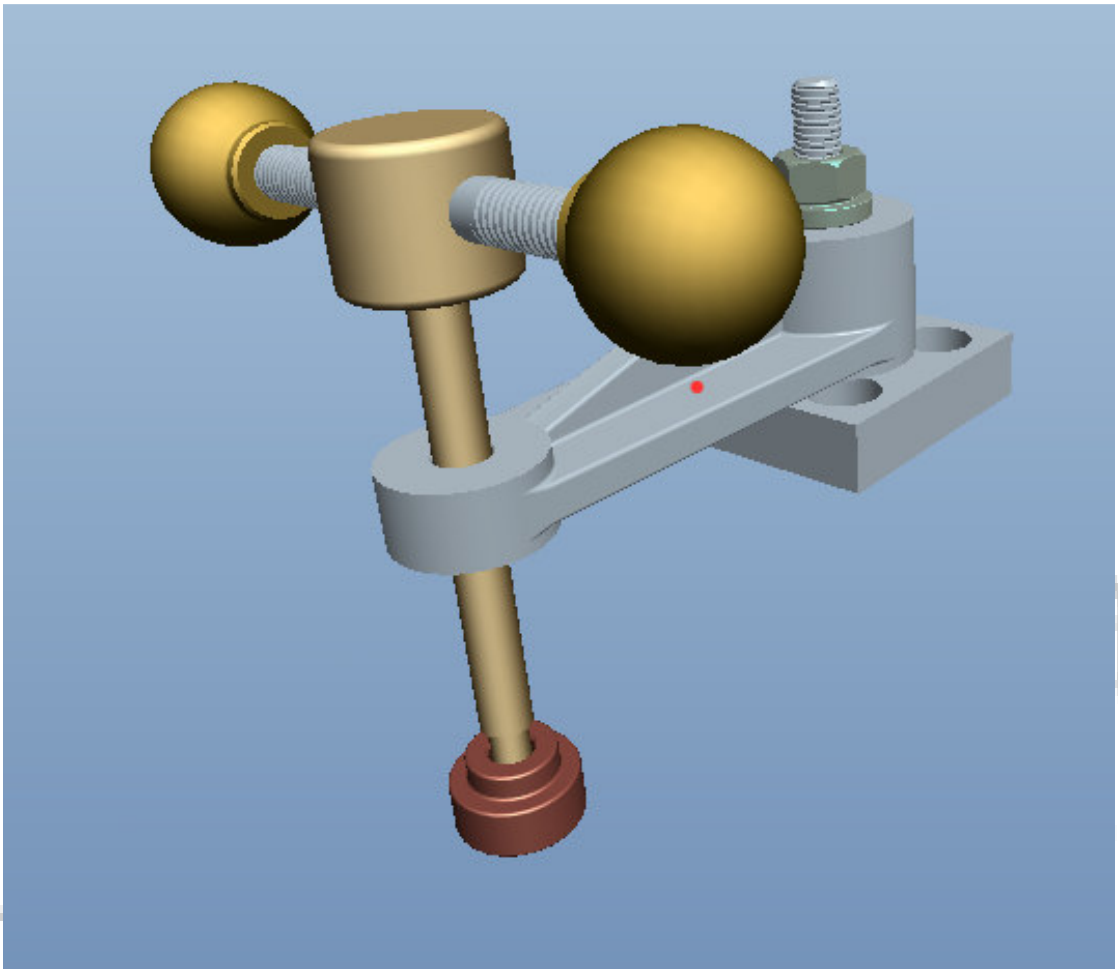

Perspective View

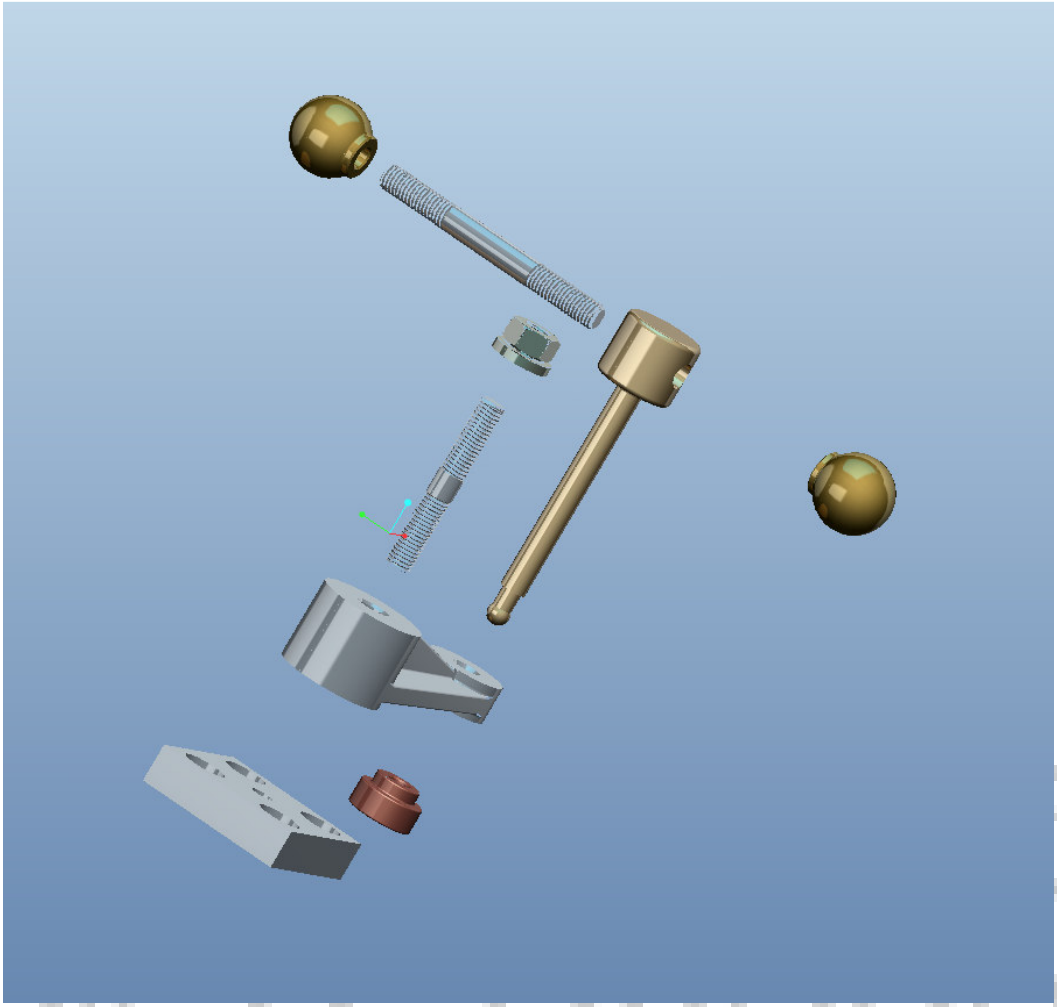

Exploded View

Lesson 10

Drawings are created from part and assembly files. There are different kinds of sheet formats available, usually denoted by a letter. After creating a drawing from a part or assembly, the drawing has to be detailed, usually to standards such as the ASME Y14.5M 2009 standards. Detailing may involve showing dimensions, moving dimensions, or deleting unwanted views and annotations.

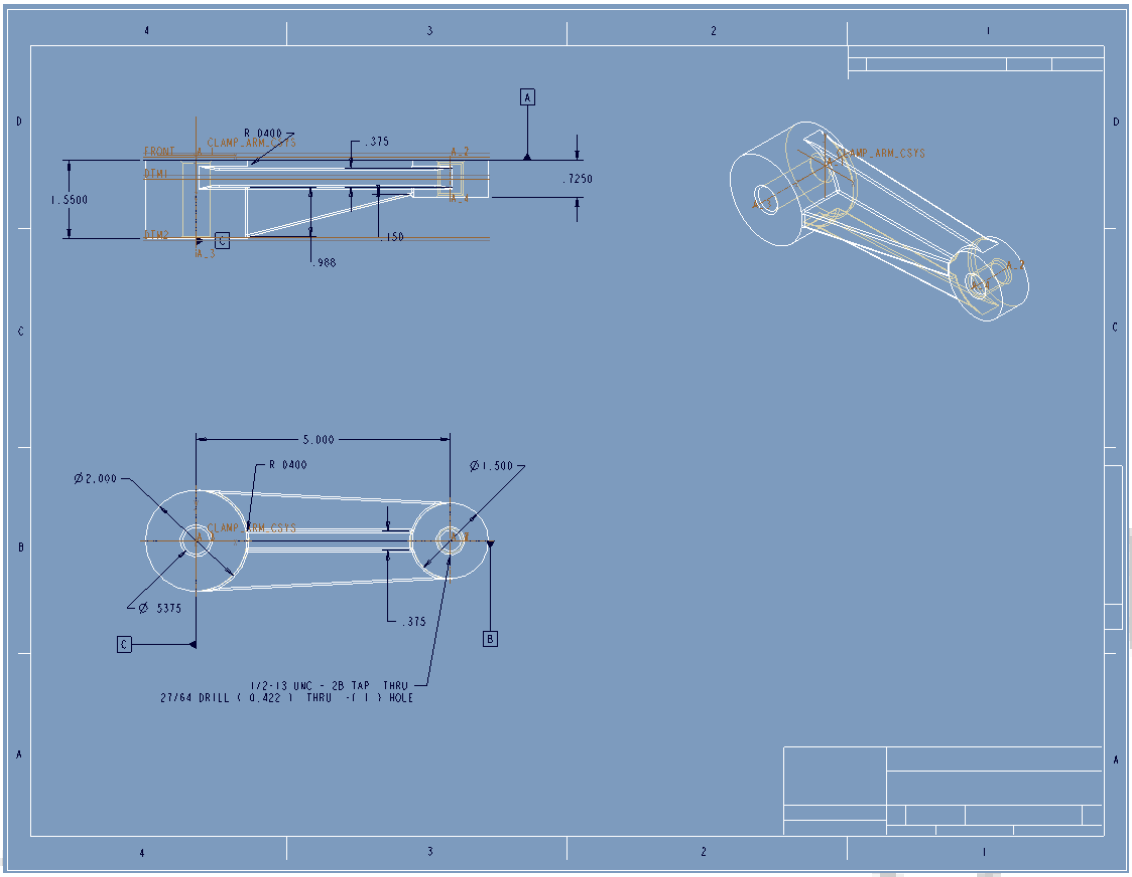

Clamp Arm Drawing

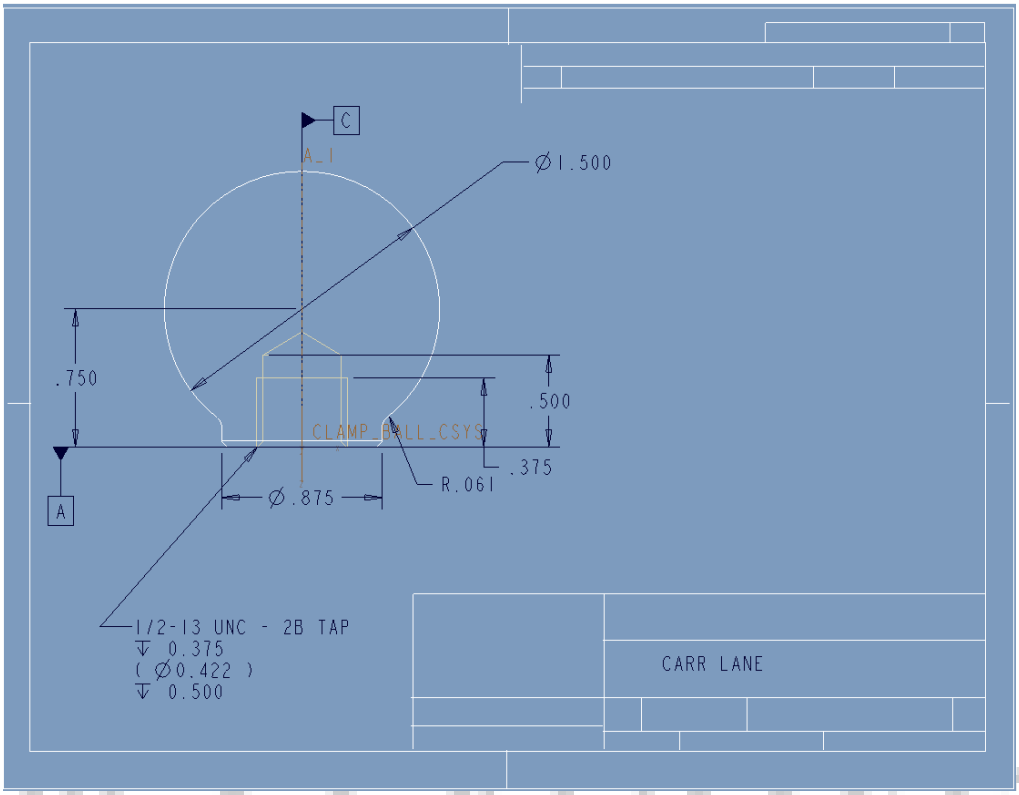

Clamp Ball Drawing

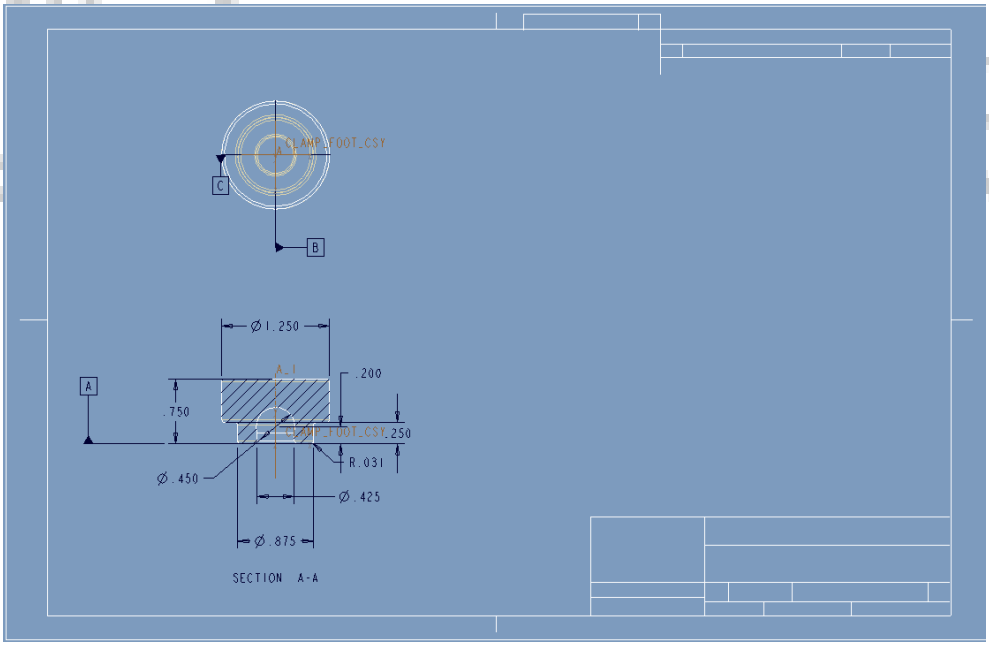

Clamp Foot Drawing

Lesson 11

In this lesson, a drawing format is created so that some of the Title Block information is already filled out when a new drawing is created. This lesson also includes a cross section in a drawing and an Auxiliary View of a feature.

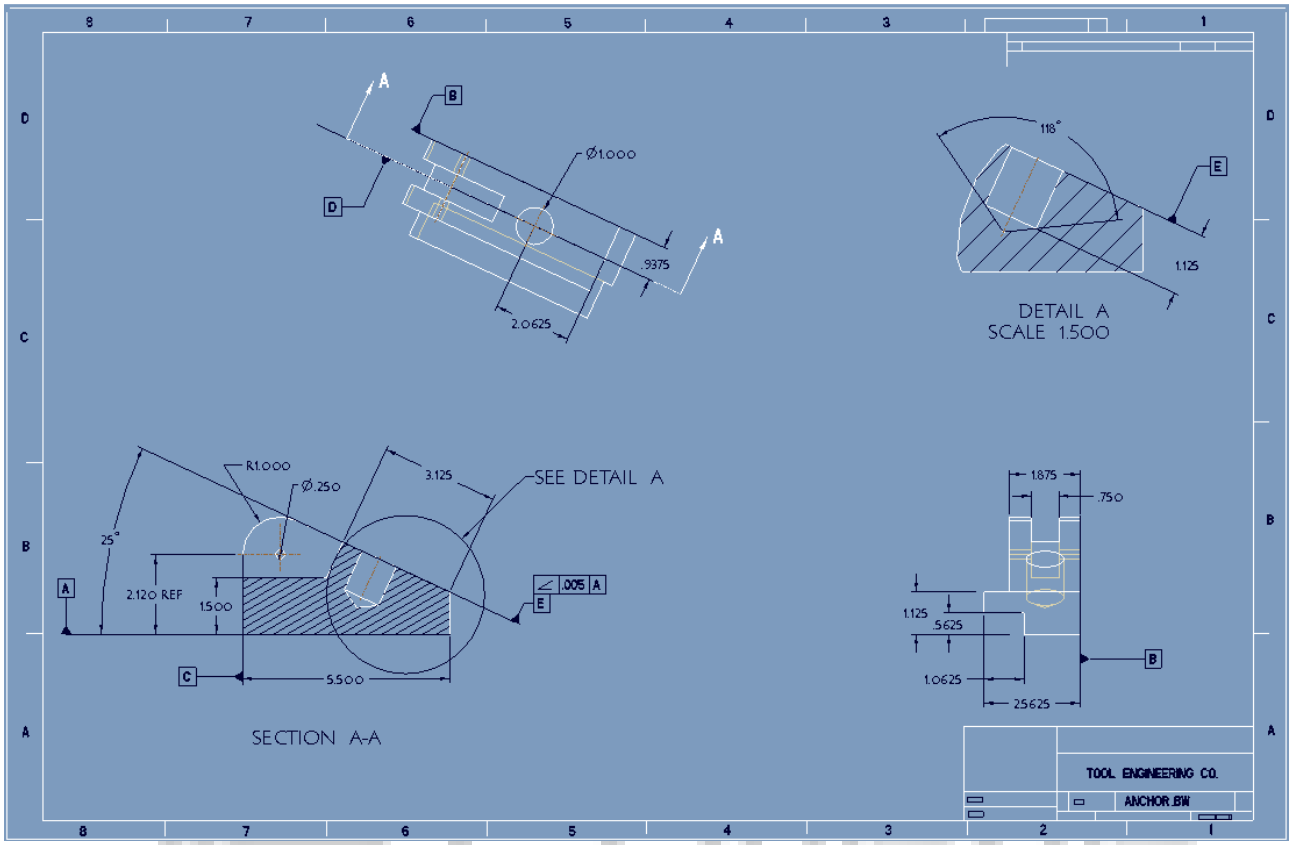

Anchor Drawing

Lesson 12

Another drawing format is created, but this time with a Bill of Material table for assemblies. The BoM will show the parameters of the components such as material and part number. The components' parameters can be accessed and edited by opening the component, going to Tools, and opening the

Parameters dialog box. BoM balloons are included to show how the parts correspond to the BoM table.

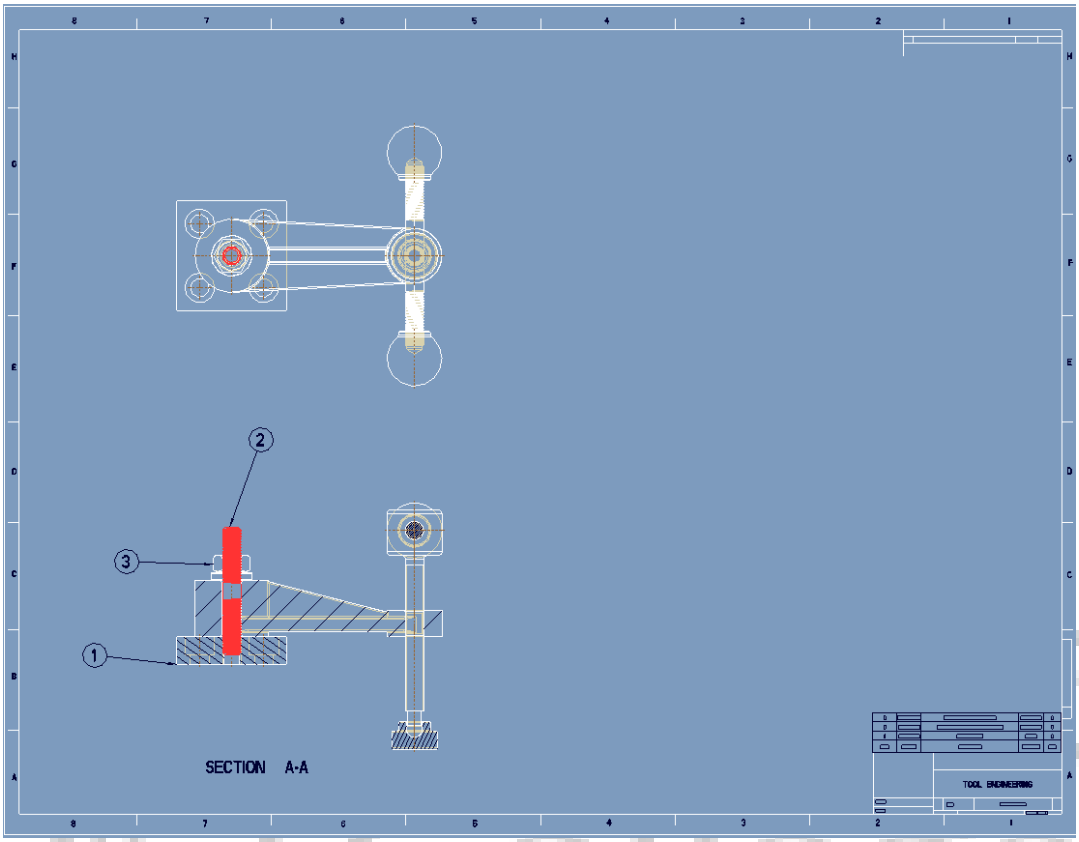

Sheet 1

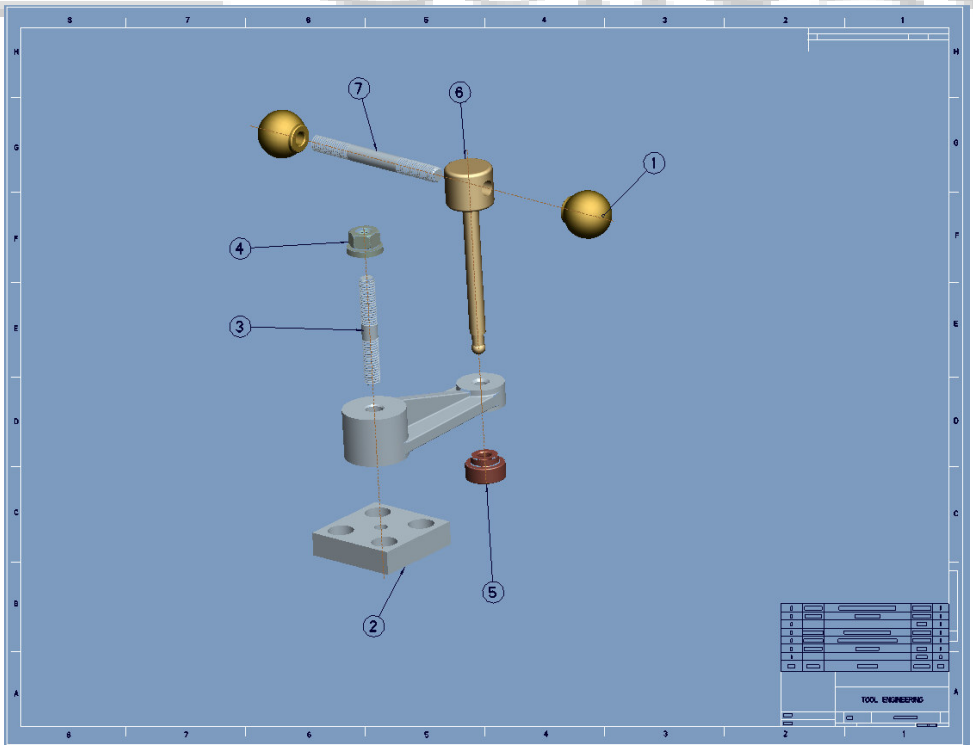

Sheet 2

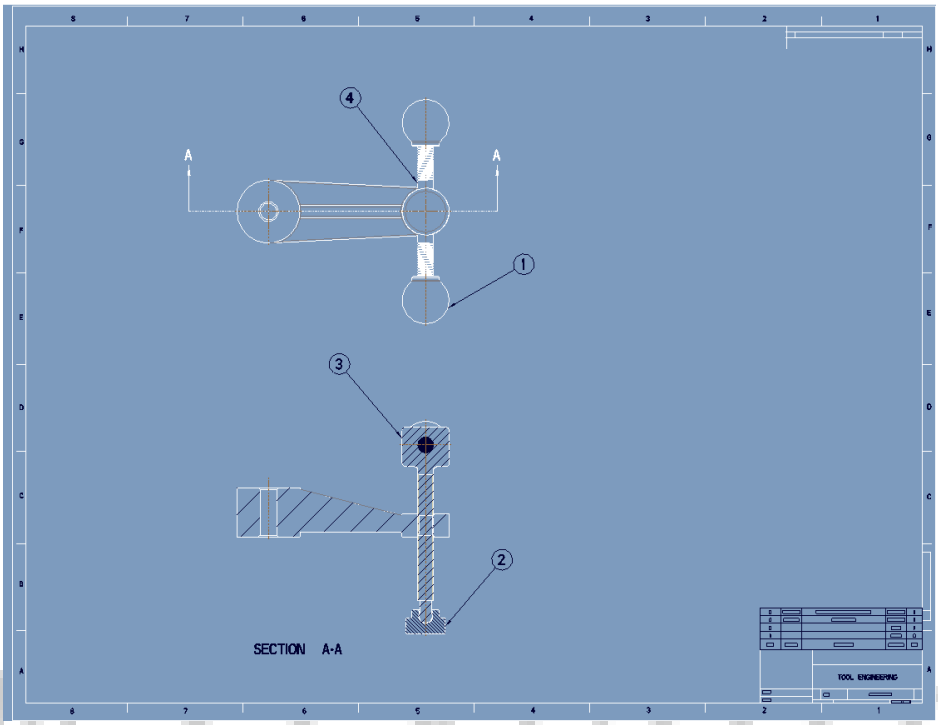

Sheet 3

Project 1

Angle Block: While the bottom cut could be included as part of the Extruded Base, it is easier to edit if it is made with a different sketch and feature. The top cut references a surface so that if the height of the surface changes, the size of the cut will change as well. This “design intent” is necessary if an ECO requires changes to the part’s dimensions.

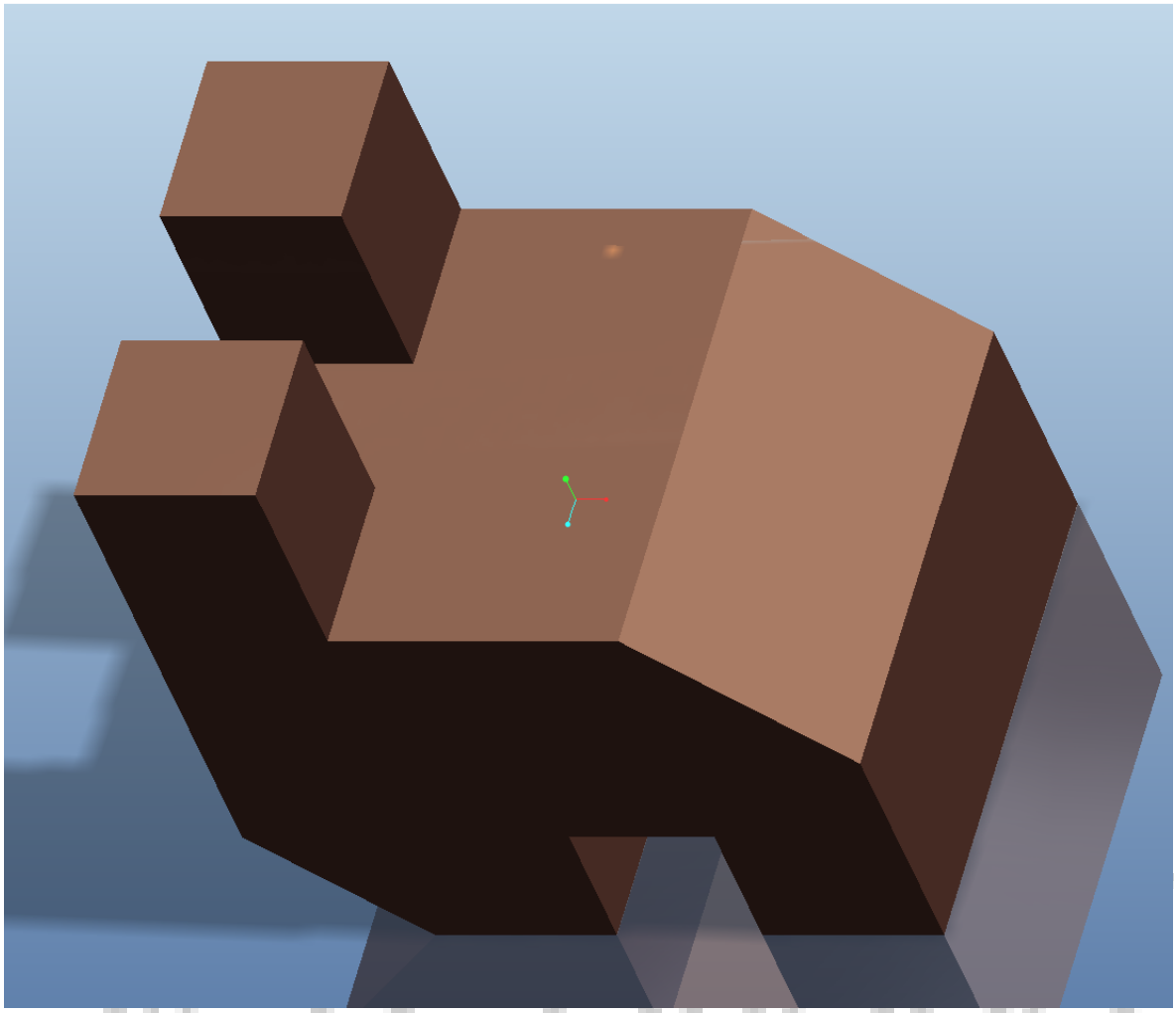

Project 2

T-Block: Again, the top cuts of this part reference surfaces for the sake of design intent. When the part had to be edited for an ECO, few features had to be edited after changing dimensions.

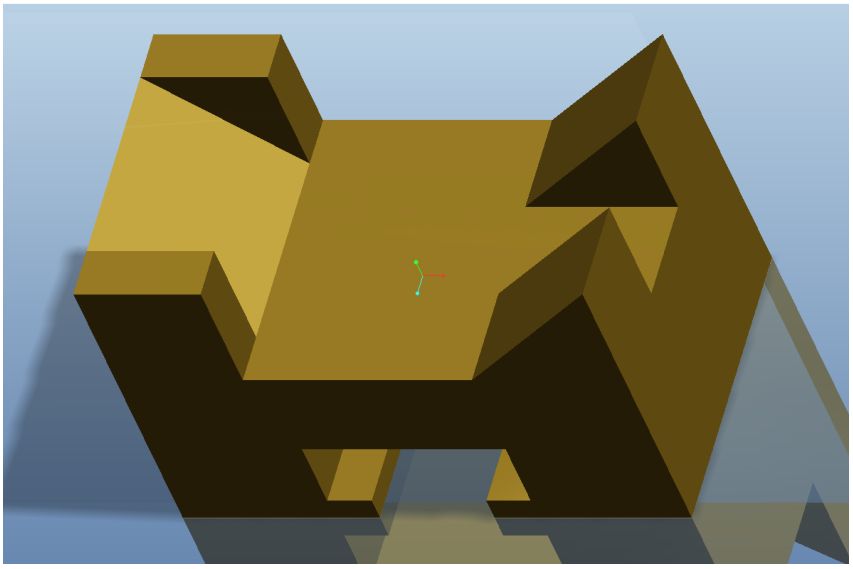

T-Block

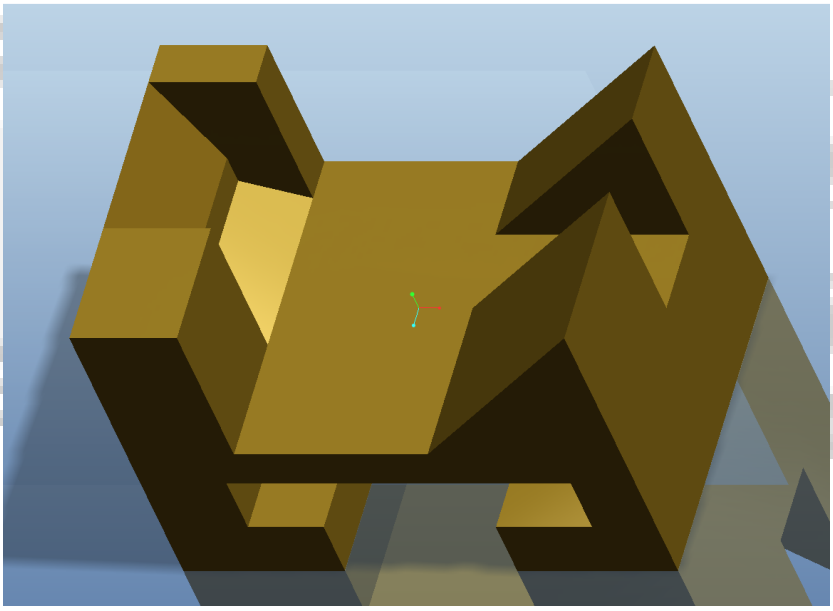

T-Block ECO

Project 3

Guide Bracket: The sketch for the Extruded Base requires relations so that three of the curves have an equal radius. The sketch from the first Extruded Cut creates an entity from the edges of the first feature and trims unwanted segments so that only a portion of the model is not included in the cut.

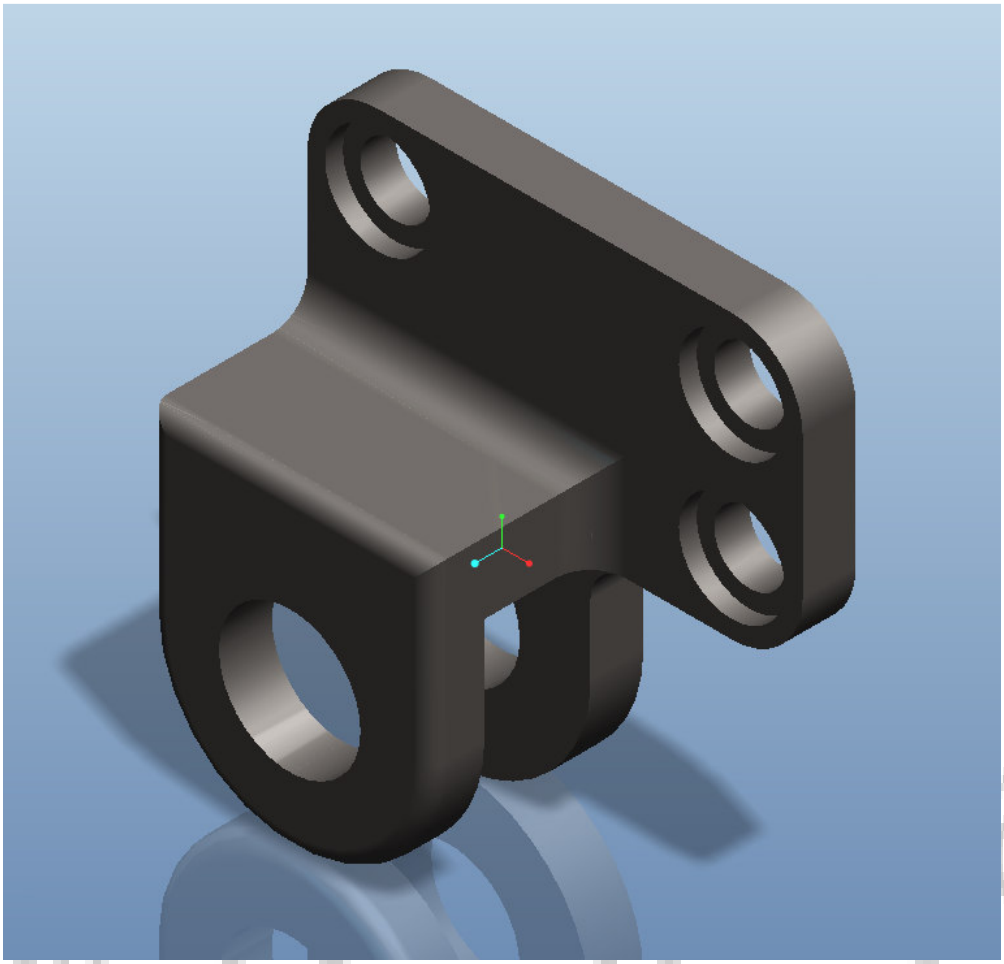

Project 4

Angle Frame: This time, one of the datum planes is at an angle to create an angled model. This model has a few features that are similar to those in the Clamp Arm in Lesson 7, as well as a sketched hole that references surfaces for design intent.

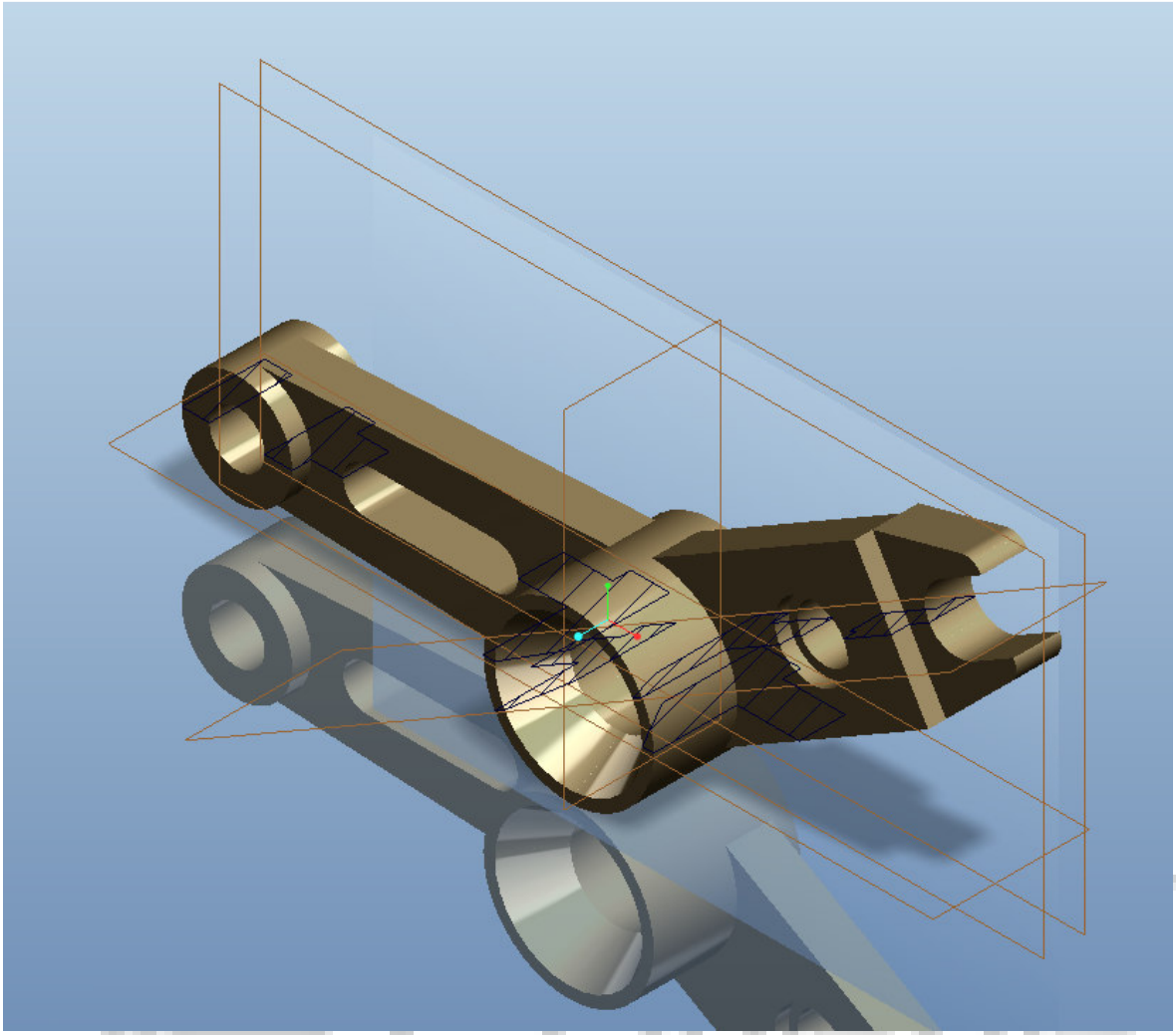

- END -

Student Documentation Package- Example