MATERIAL SELECTION

340. The use of certain materials is another way to control corrosion. You will seldom be involved in selecting materials for the construction, but it is helpful to be aware of the principles used.

GALVANIC SERIES

Anodic	
	Magnesium
	Aluminum
	Zinc
	Iron
	Cadmium
	Nickel
	Tin
	Lead
	Hydrogen (Reference point)
	Copper
	Silver
	Platinum
	Gold
Cathodic	

If possible, the best metals to use in a structure to resist corrosion are those metals at the (top / bottom) of the Galvanic Series.

341. A copper pipe tends to corrode (faster / slower) than a steel (iron) pipe.

342. But, some economic factors must be considered. As you can probably guess, the cost of using a copper pipe would be _____ .

343. It may be economical to use a steel pipe and rely on another form of corrosion _____ to protect it.

344. As you recall, if you couple two kinds of metals together, a _____ cell will form.

345. So, if dissimilar metals are to be coupled together, such as when two pipes are joined together with a metal joint, it is best to couple metals (far apart / close together) in the Galvanic Series.

346. Galvanic corrosion can also be prevented by isolation or separation of the two metals with a non-conductive material.

Non-metallic washers are often used to separate valves, meters, etc. from a metal pipe. It is, therefore, very important to keep these insulators in good condition to prevent electrical current _____ .

347. Use of special equipment, gaskets, etc. because they stop current flow, is known as _____ .

348. Shown below is an illustration of an insulated union. It is used to _____ current flow from one piece of pipe to the other.

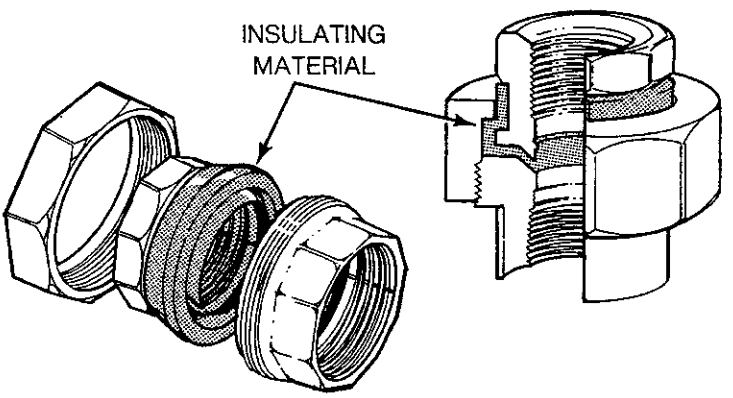

349. Caution must be exercised to maintain the insulator in good condition, especially when reinstalling it. This will prevent the _____ of electricity, thus preventing a _____ _____ from developing.

350. Alloys are also used in an attempt to control corrosion. Alloys, unlike pure metals, contain a mixture of two or more different types of _____ .

351. Iron is the major component in ferrous alloys. Whereas nonferrous alloys contain (more / less) than 50% iron.

352. Because of their composition, alloys tend to (resist / cause) corrosion.

353. Stainless steels are probably the most common form of an _____ .

354. Nonmetallic materials, such as cement, fiberglass or plastic, are also used in structures or as coatings because they (resist / do not resist) corrosion.

355. But, there are limitations when planning the use of nonmetallic materials. It is important to consider the environment in which they will be used.

For example, fiberglass cannot be used in very high pressure systems. Therefore, you would most likely use fiberglass in a (gas-injection system / water storage tank).

CATHODIC PROTECTION

356. As you recall, corrosion is an electrochemical process in which a current exits at the anode and enters at the _____ .

357. Cathodic protection is a method of corrosion control in which a corrosion cell is purposely set up.

Cathodic protection involves relocating corrosion away from the structure to a sacrificial anode. Therefore, you are (stopping / not stopping) corrosion, only changing where it is occurring.

358. The pipe or structure that you want to be protected will be made the (anode / cathode).

359. Many times cathodic protection will be used to protect a metal that has a protective coating with flaws or _____ .

360. So, the bare or exposed pipe will be protected by being made the _____ .

361. The anode usually takes one of two forms. It can be a sacrificial anode or an impressed current anode.

A sacrificial anode is a piece of metal coupled to the cathode that is "sacrificed" and _____ .

362. Most often, a sacrificial anode is made of magnesium, aluminum or zinc because they (resist / do not resist) corrosion.

363. Look at this diagram:

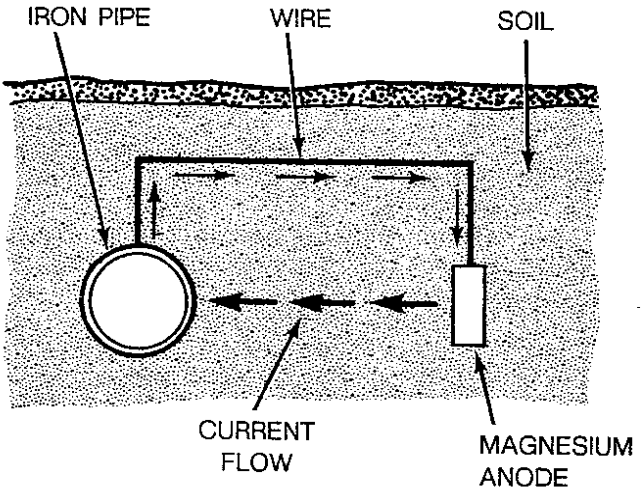

When connecting a magnesium anode to an iron pipe, the pipe will (corrode / be protected).

364. When a pipe is protected by a sacrificial anode, the flow of current through the electrolyte is from the (magnesium anode / pipe) to the (magnesium anode / pipe).

365. The pipe is actually protected by the _____ current generated by the corroding sacrificial anode.

366. With a sacrificial anode system, maintenance is also needed. The anodes will gradually corrode and will need to be occasionally _____ .

367. The other form of cathodic protection is an impressed current, which involves an outside source of power.

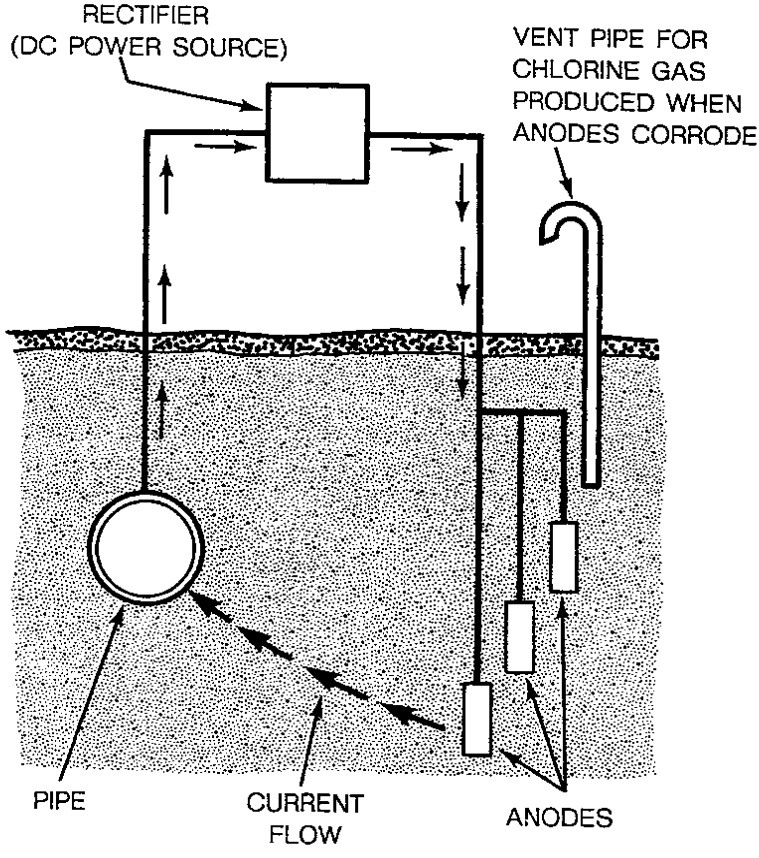

In the above diagram, the source of power is the _____ .

368. One or more _____ are attached to one terminal of the power source and the _____ is attached to the other terminal.

369. As you recall, the electric current flows into the anode and then to the _____ .

370. So, as larger amounts of electric current enter into the anode, (more / less) protection is given to the cathode.

371. Therefore, the use of this type of system can control or regulate the amount of _____ _____ . supplied to the metal.

372. Both forms of cathodic protection have their advantages and disadvantages.

One obvious disadvantage of the impressed current system is the possibility of stray _____ currents.

373. And, a _____ _____ cell may form.

374. If these currents enter into a pipe that is not cathodically protected, that section of pipe will become (an anode / a cathode).

375. Impressed current systems are usually more expensive to use than sacrificial anodes, mainly because of the equipment involved.

Since there is a larger amount of current flowing between electrodes, an impressed current system is capable of protecting a (smaller / larger) area than sacrificial anodes.

376. Since an impressed current system is more complicated, i will usually require (more / less) maintenance than sacrificial anodes.

377. In order to cathodically protect a structure such as a pipeline, it is important to control the flow of electricity.

One way to prevent electrical flow in wiring is to wrap the wire with _____ .

378. Pipelines can be isolated from wellheads, etc. through the use of flanges that _____ them.

379. This insulation would have to provide a physical _____ .

380. Placing a flange insulator as shown below

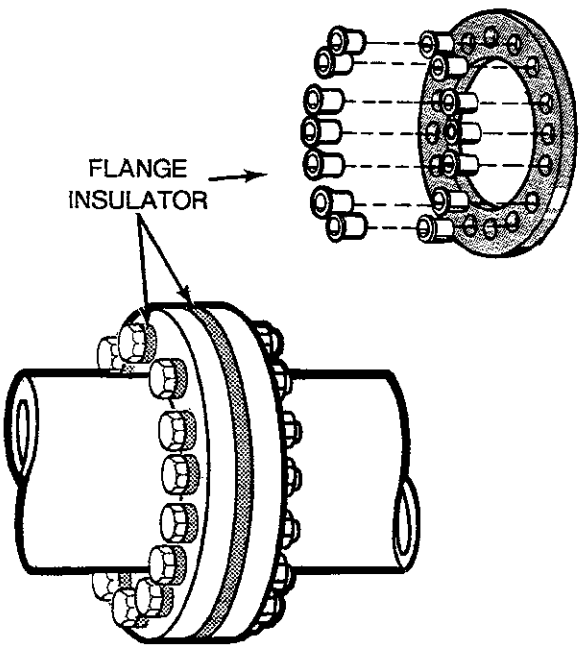

physically _____ the two pieces of pipe.

381. For the cathodic protection to function properly, you mus be careful not to _____ the flange insulator.

TREATMENT OF DOWNHOLE EQUIPMENT

382. Different types of equipment require different types of protection and treatment. The most common are shown below.

	Material Selection	Protective Coatings	Inhibitors	Cathodic Protection
Downhole Equipment				
Sucker-rod pumps	X		X	
Electric submersible pumps	X	X	X	
Hydraulic pumps			X	
Sucker-rod	X		X	
Tubing:				
in gas lift systems		X	X	
in water-injection systems	X	X		
in gas and gas condensate systems	X	X	X	
Casing			X	X
Vessels				
Stock tanks:				
decks	X	X		
floors		X		X
Heater treaters		X		X
Gun barrels		X		X
Free water knockouts		X		X
Filters		X		X
High pressure separators		X		X
Line heaters			X	
Pipelines				
Internal		X	X	
External		X		X

According to the matrix, the most common form of protection from corrosion in downhole equipment is the use of _____ .

383. Most often, inhibitors are even more effective when used in combination with metal selections or _____ _____ .

384. Corrosion is especially a problem with sucker-rods. Due to the constant movement of the sucker-rods (hydrogen embrittlement / corrosion fatigue) is common.

385. Tubing within gas or gas-condensate wells has a special problem. High pressure and high temperatures (increase / decrease) the possibility of corrosion.

386. The decks within tanks of sour systems accumulate condensation.

So, referring to the matrix, proper material selection along with nonmetallic _____ prevent corrosion most effectively.

387. The tank floors have a problem with water accumulating. So, protective coatings along with _____ _____ are most effective.

388. It is important to remember that cathodic protection can only protect those areas "visible" to the anode.

If an area cannot be "seen" by the anode, cathodic protection (is just as effective / is no longer effective).

389. Within heater-treaters, there are many "nonvisible" areas. Therefore, (more / fewer) anodes are needed for cathodic protection to work well.

390. As you recall, if moisture is not present, corrosion cannot occur.

In high pressure separators, the low moisture levels make corrosion (a big problem / a small problem).

391. The best protection against external corrosion of pipelines is a combination of cathodic protection and _____ _____ .

392. Coatings without cathodic protection are never recommended for pipelines. Stray currents may be picked up on pipelines in one area and leave through a holiday.

This situation may lead to (another holiday / severe damage).

393. If more than one cathodic protection system is used, the possibility of a (temperature cell / stray current cell) forming exists.

REVIEW

394. Corrosion is an electrochemical process where a substance reacts with the environment and _____ .

395. Within the corrosion cell, there is a conductor, an electrolyte and two _____ .

396. The electrode that corrodes is the _____ .

397. If there are two types of metals within the corrosion cell, you have a _____ cell.

398. There are many agents that affect the corrosion rate. When oxygen, hydrogen sulfide or carbon dioxide gases mix with _____ , they become corrosive.

399. When the gas, hydrogen sulfide, is present in the system you have (sweet / sour) corrosion.

400. In order to find out if there is a corrosion problem or to see if treatment or control programs are working, various types of _____ can be done.

401. Once a problem has been detected, a control program will be decided upon and implemented.

If scale deposits are a problem, chemical _____ are used to treat the _____ .

402. If oxygen is in the system, mechanical means can be used to remove the oxygen.

Two methods commonly used are vacuum deaeration and _____ .

403. Another method of controlling corrosion is by purposely setting up a corrosion cell and making a desired area the cathode. This type of corrosion control is known as _____ _____ .

404. Corrosion is a costly problem that can be monitored and controlled. Taking preventative measures can help reduce the occurrence of personal _____ or equipment _____ resulting from corrosion.

THE END