Electrical Level 1

Electrical Theory 26104-14

Objectives

When trainees have completed this lesson, they should be able to do the following:

1. Explain the basic characteristics of combination circuits.
2. Calculate, using Kirchhoff's voltage law, the voltage drop in series, parallel, and series-parallel circuits.
3. Calculate, using Kirchhoff's current law, the total current in parallel and series-parallel circuits.
4. Using Ohm's law, find the unknown parameters in series, parallel, and series-parallel circuits.

This is a knowledge-based module; there are no Performance Tasks.

Introduction; Resistive Circuits

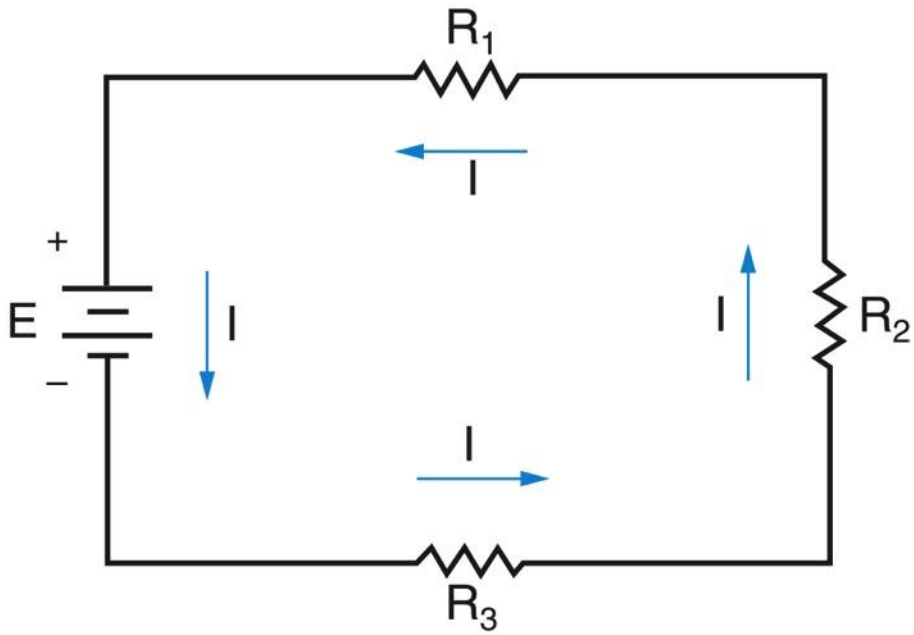

26104-14_F01.EPS

- A series circuit contains only one path for current flow.
- In a series circuit, the current is equal at each point in the circuit.

Total Resistance

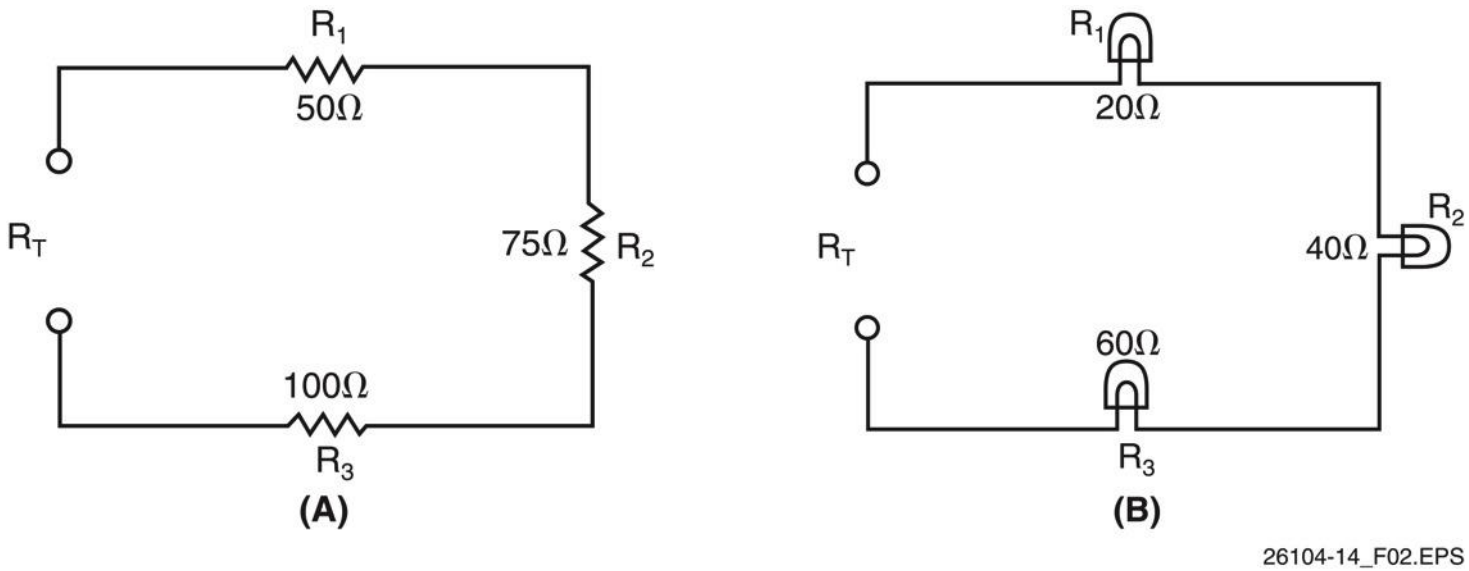

- In a series circuit, the total resistance is equal to the sum of the individual resistances.
- In the circuits shown here, the total resistance is:

  Circuit A, 50Ω + 75Ω + 100Ω = 225Ω

  Circuit B, 20Ω + 40Ω + 60Ω = 120Ω

Resistances in Parallel

- In a parallel circuit, the resistance is calculated by dividing the sum of the inverse values of the individual resistances by one:

$$\frac{1}{\frac{1}{R_1} + \frac{1}{R_2} + \frac{1}{R_3} + \frac{1}{R_4}}$$

- In the circuit shown, the total resistance is :

$$\frac{1}{\frac{1}{2} + \frac{1}{4} + \frac{1}{8}} =$$

$$\frac{1}{0.5 + 0.25 + 0.125} =$$

$$\frac{1}{0.875} = 1.14\Omega$$

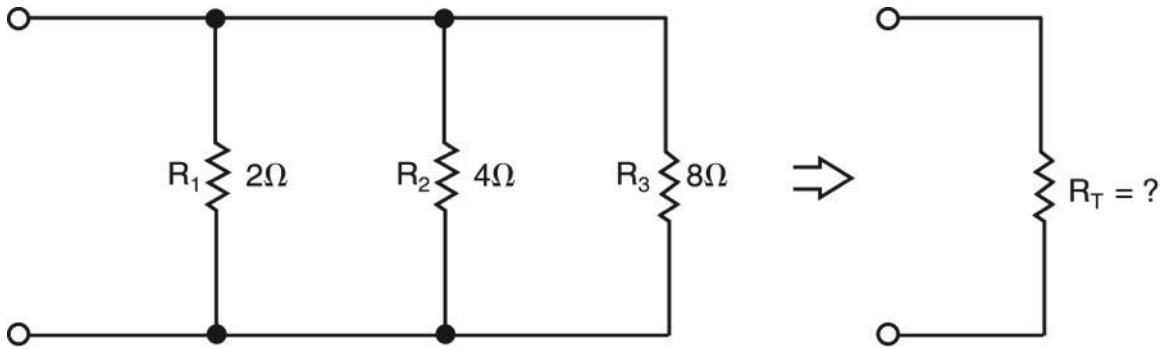

26104-14_F03.EPS

Simplified Formulas

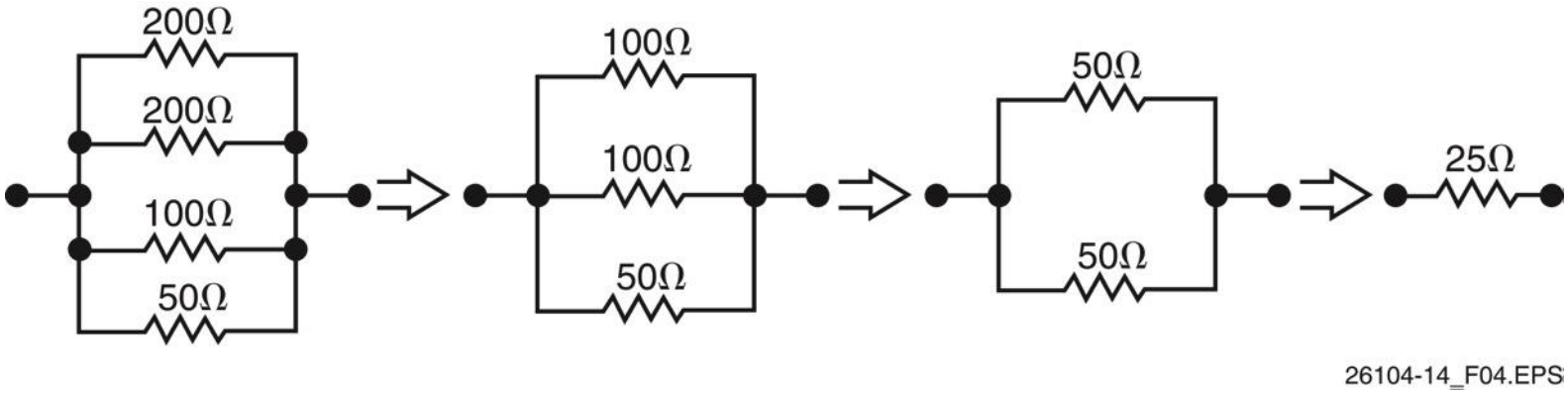

- The total resistance of equal resistors in parallel is found by dividing the resistance of each resistor by the number of resistors ($R_T = R/N$).
- The total resistance of two unequal resistors in parallel is found by multiplying the values of the two resistors and then dividing the sum of the two resistances:

$$R_T = \frac{R_1 \times R_2}{R_1 + R_2}$$

Series-Parallel Circuits

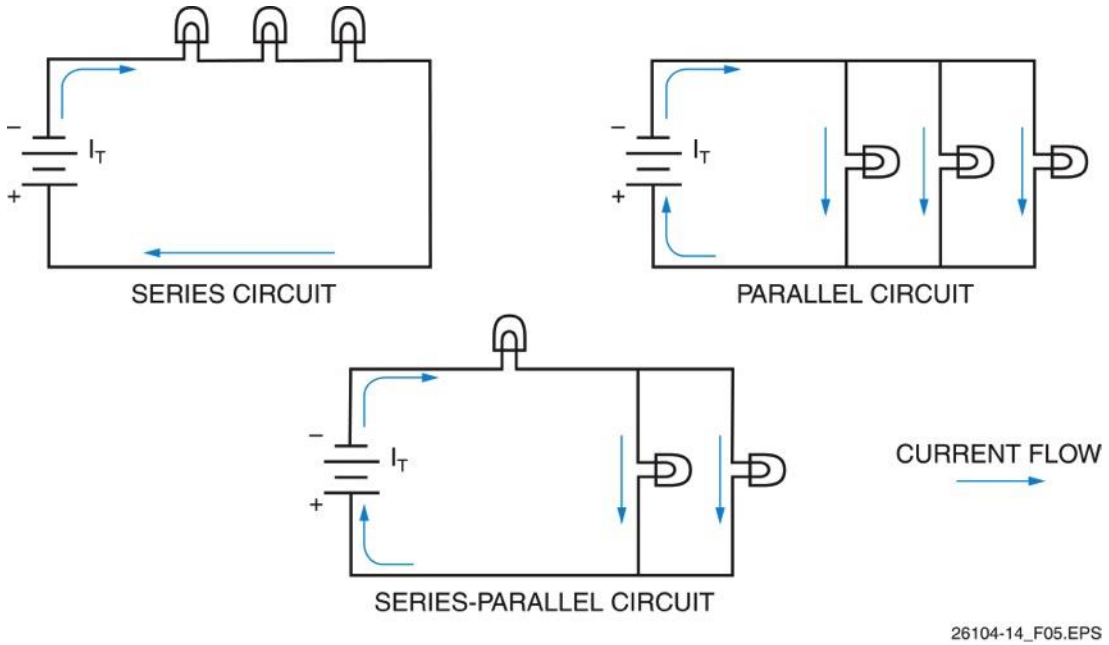

- If a circuit does not divide, it is a series circuit.
- If a circuit divides into separate branches, it is a parallel circuit.
- If a circuit divides into separate branches and there are also series loads, it is a series-parallel circuit.

Redrawing a Series-Parallel Circuit

Series-parallel circuits can be redrawn to separate the series and parallel components.

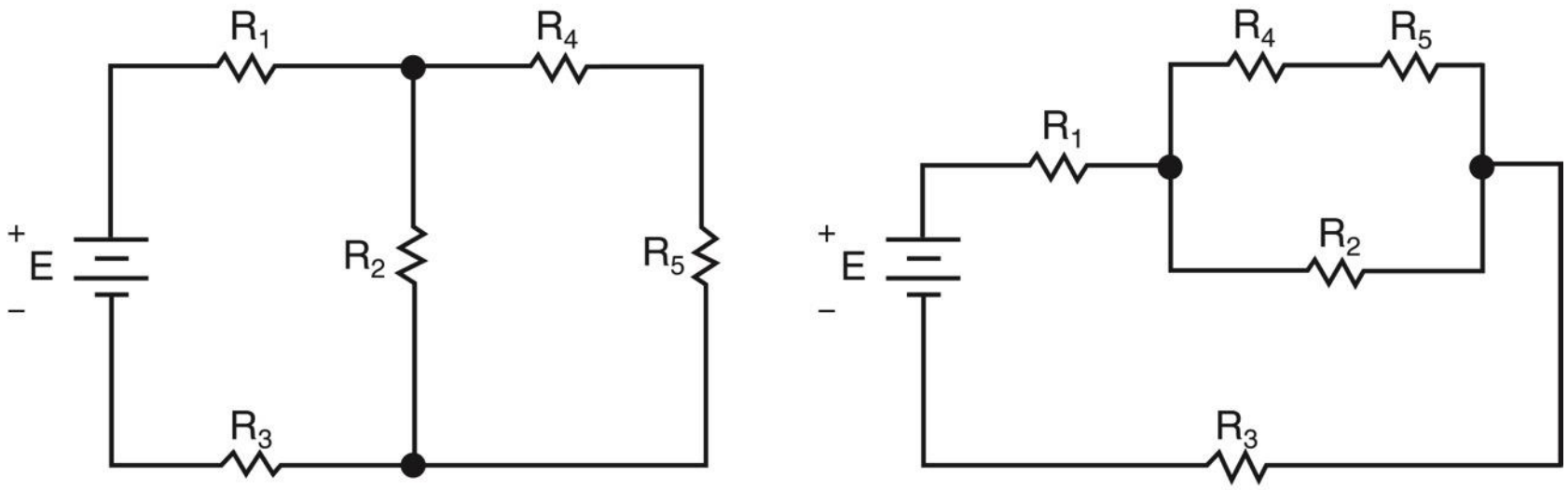

26104-14_F06.EPS

Next Session…

Solving Series-Parallel Circuits

To calculate the total resistance in a series-parallel circuit, first calculate the effective resistance of the parallel component, then add it to the resistance of the series loads.

Applying Ohm's Law

Applying Ohm's Law

- To find the voltage across individual resistors, first calculate the total resistance in the circuit.
- Next, use the total resistance in the Ohm's Law equation (E = IR) to find the individual voltage drops.

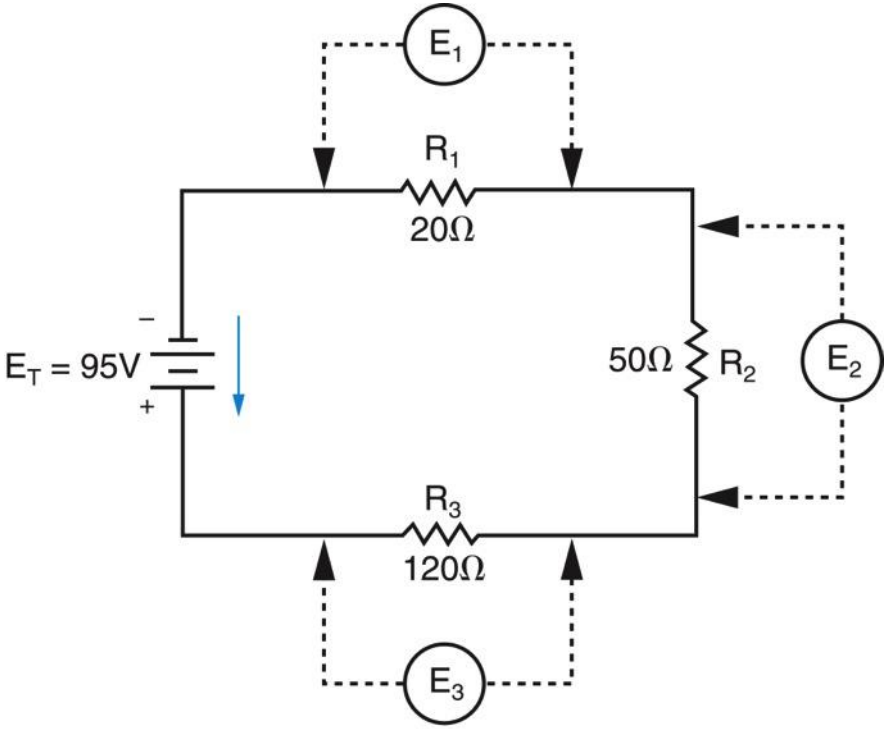

26104-14_F08.EPS

Voltage and Current in Parallel Circuits

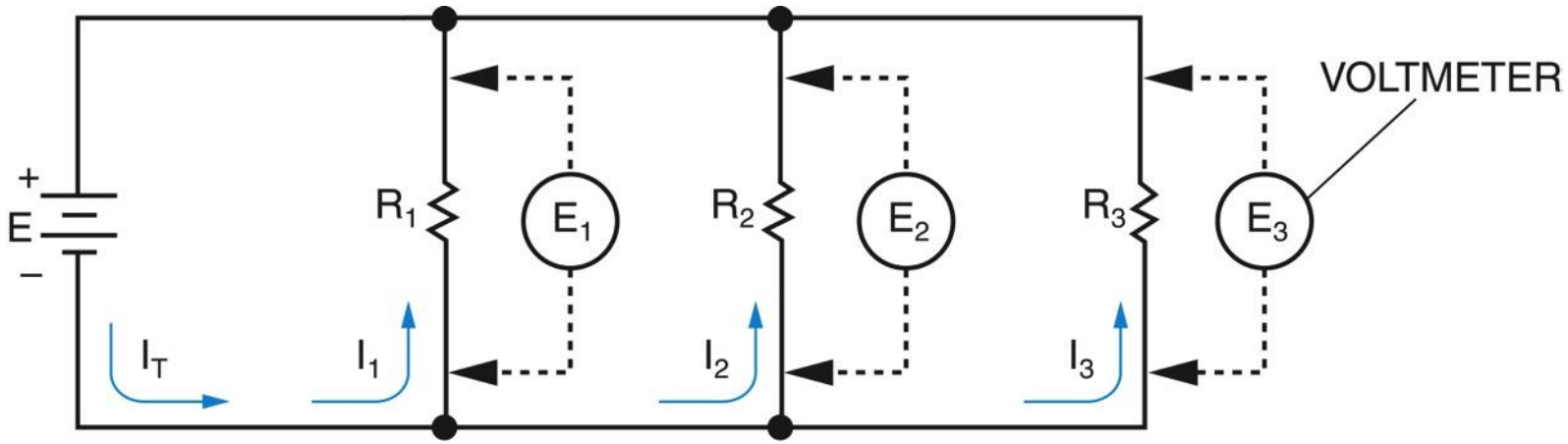

26104-14_F09.EPS

- In a parallel circuit, the total current is equal to the sum of the branch currents.
- The branch current is equal to the applied voltage divided by the resistance of that branch.

Solving for an Unknown Current

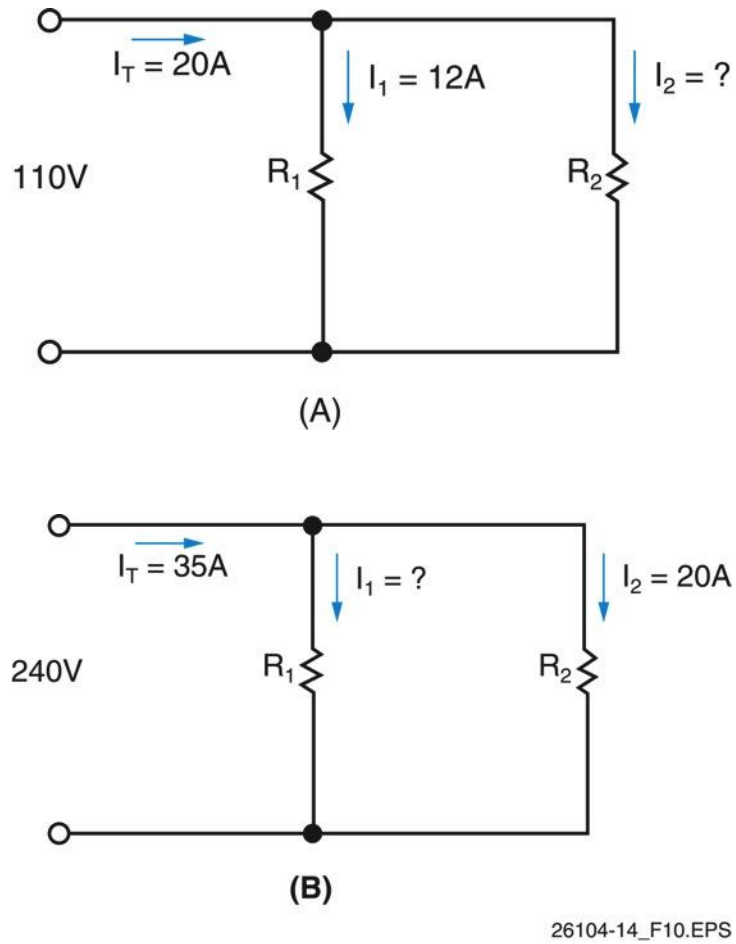

- The current in branch R_2 in Circuit A can be calculated as follows:

  $I_T = I_1 + I_2$

- Rearrange to find I_2:

  $I_2 = I_T – I_1$

  $I_2 = 20A – 12A = 8A$

- The current in branch R_1 in Circuit B can be calculated as follows:

  $I_T = I_1 + I_2$

- Rearrange to find I_1:

  $I_1 = I_T – I_2$

  $I_1 = 35A – 20A = 15A$

Voltage and Current in Series-Parallel Circuits

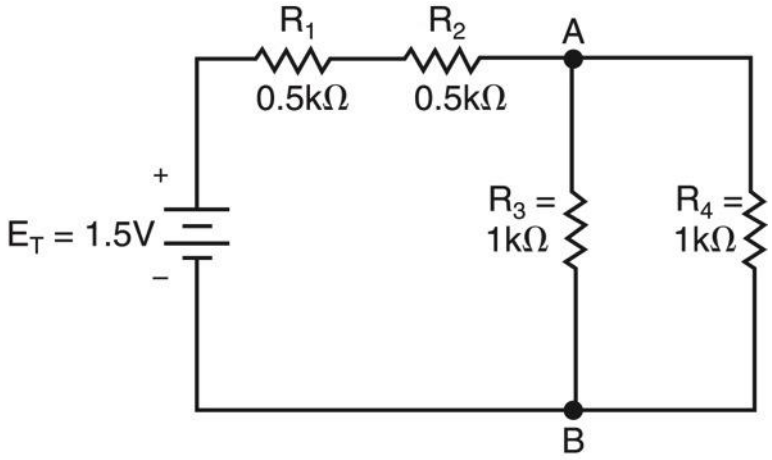

26104-14_F11.EPS

- The series resistance is found by adding $R_1 + R_2$:

$$R_{1+2} = R_1 + R_2$$
$$R_{1+2} = 0.5k\Omega + 0.5k\Omega$$
$$R_{1+2} = 1k\Omega$$

- Calculate the resistance of $R_3 + R_4$ using either the general reciprocal formula or the product over sum method, as shown here:

$$R_{3+4} = \frac{R_1 \times R_2}{R_1 + R_2}$$
$$R_{3+4} = \frac{1k\Omega \times 1k\Omega}{1k\Omega + 1k\Omega}$$
$$R_{3+4} = 0.5k\Omega$$

Next Session…

Kirchhoff's Laws

Simplified Series-Parallel Circuit

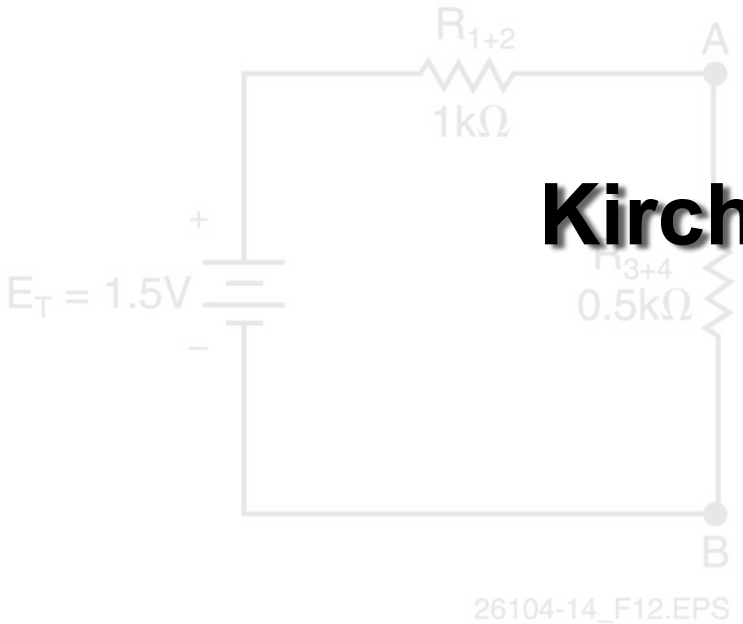

- Calculate the total resistance as follows:

$$R_T = R_{1+2} + R_{3+4}$$

$$R_T = 1k\Omega + 0.5k\Omega = 1.5k\Omega$$

- Apply Ohm's law to find the total current as follows:

$$I_T = E_T/R_T$$

$$I_T = 1.5V/1.5k\Omega = 1mA \text{ or } 0.001A$$

- Individual voltage drops are calculated using Ohm's law:

$$E_{R1} = I_T R_1 = 1mA \times 0.5k\Omega = 0.5V$$

$$E_{R2} = I_T R_2 = 1mA \times 0.5k\Omega = 0.5V$$

Kirchhoff's Laws

- Kirchhoff's current law states that at any point in a circuit, the total current entering that point must equal the total current leaving that point:

$$I_A + I_B - I_C = 0$$

$$5A + 3A - 8A = 0$$

- Kirchhoff's current law is the basis for the practical rule in parallel circuits that the total line current must equal the sum of the branch currents.

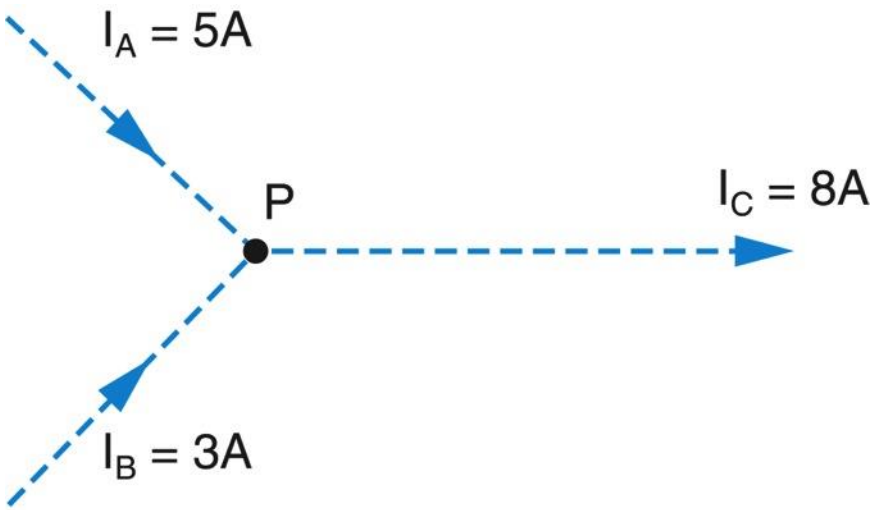

26104-14_F13.EPS

Application of Kirchhoff's Current Law

- Applying Kirchhoff's current law to this circuit at Point C can be shown as follows:

$$I_T - I_3 - I_{4/5} = 0$$

$$6A - 2A - 4A = 0$$

- Applying Kirchhoff's current law to this circuit at Point D can be shown as follows:

$$I_3 + I_{4/5} - I_T = 0$$

$$A + 4A - 6A = 0$$

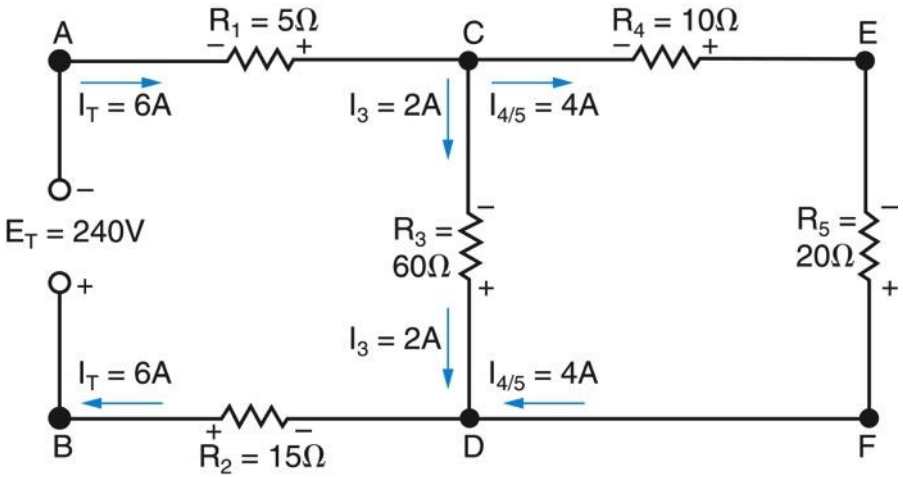

26104-14_F14.EPS

Kirchhoff's Voltage Law

- Kirchhoff's voltage law states that the algebraic sum of all the potential differences in a closed loop is equal to zero:

$$E_A - E_1 - E_2 - E_3 = 0$$

$$100A - 50A - 30A - 20A = 0$$

- This means that the sum of the voltage drops in a circuit is equal to the applied voltage.

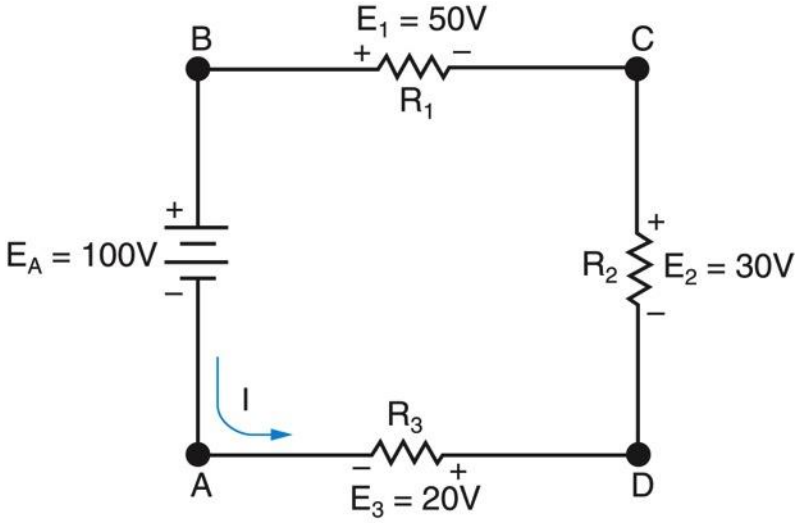

26104-14_F15.EPS

Loop Equations

- Any closed path for current flow is called a loop. A loop equation specifies the voltages around the loop:

  – $E_1 – E_3 – E_2 + E_T = 0$

  – 30V – 120V – 90V + 240V = 0

- Voltages E_1, E_3, and E_2 have a negative value because there is a decrease in voltage seen across each of these resistors in a clockwise direction.

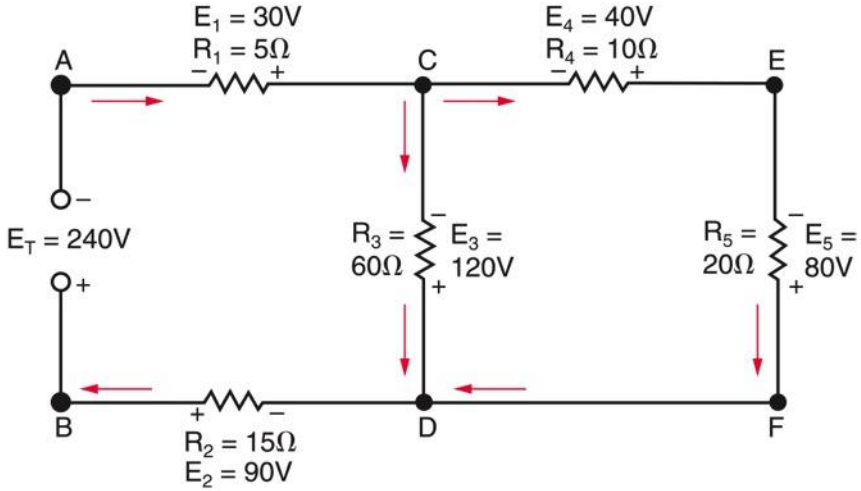

26104-14_F16.EPS

Applying Kirchhoff's Voltage Law

The voltage EB is calculated as follows:

$$-E_3 - E_B - E_2 - E_1 + E_A = 0$$

Rearranged to solve for E_B:

$$E_B = E_A - E_3 - E_2 - E_1$$

$$E_B = 15V - 2V - 6V - 3V$$

$$E_B = 4V$$

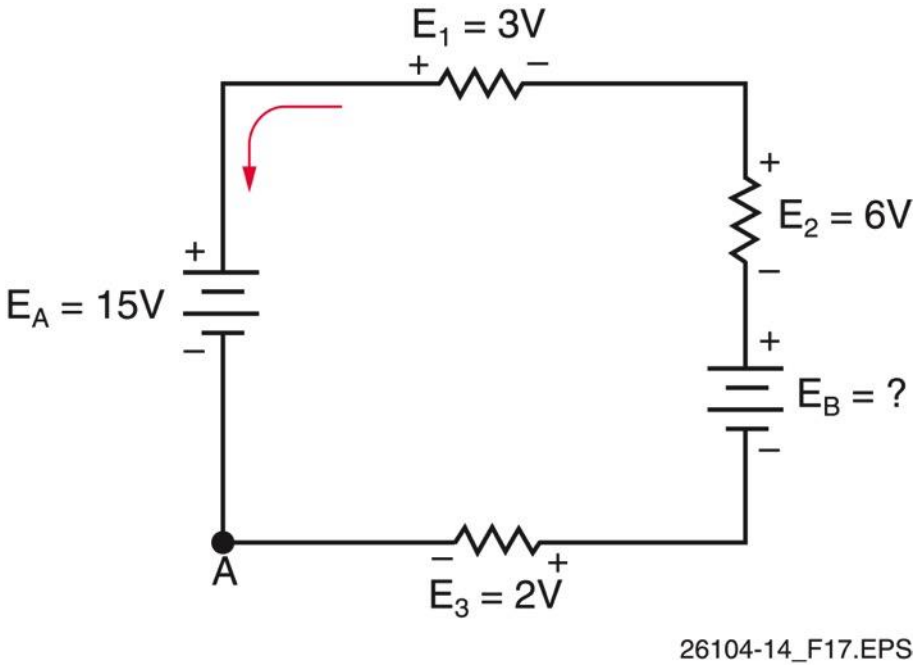

Wrap Up

3-2-1

3 – Write 3 important things learned during class

2 – Write 2 questions you have about the material

1 – Write 1 thought you had about the material

Next Session…

MODULE EXAM

Review the complete module to prepare for the module exam. Complete the Module Review as a study aid.