**Lansing Community College**

**Course Cover Sheet**

**M-CAM Training Area:**
☐CNC/Machining ☒Multi-Skilled Mechatronics ☐Production Operation ☐Welding/Fabrications

**Program(s):** Intro to Mechatronics Block 1-3
**Course:** Block 3 Capstone Evaluation
**Course Description:**
Using the skills learned in Block 3 of Lansing Community College's AMTEC Mechatronics program, students will work in a team of 2-3 to safely assemble and program an automated system that utilizes robotics, motor starting (conveyor), pneumatics (stack feeder), sensors, indicator lights and electrical components.
The student must have successfully completed all prerequisites, lessons and labs in the following subjects before starting this Capstone:

- Allen Bradley PLC's (103X)
- Robotics (105X)

The instructor will provide the automated task, equipment, wiring schematics, fluid schematics and process flow chart.

The student team will have a specified amount of time to wire, program and troubleshoot the automated system. Delivery method is face-to-face.

**Date Created:** January, 2016.

**Employer/Industry Partner:** Magna/DexSys, Lansing, Michigan and various manufacturing companies in Mid-Michigan.

**Faculty Developer(s)/Instructional Designers(s):** Sean Hickman/Ann Lapo

**College Contact:** Jill Doederlein
**Phone:** 517.483.9665
**Email:** doederj@lcc.edu

**Additional Information/Comments:** Hands-on capstones were designed to solidify learning for an entire block of courses and potentially showcase students' projects to employers. Capstones may also be used as prerequisites to programs/courses to offer students an opportunity to "test out" of required courses.

This workforce solution was funded by a grant awarded by the U.S. Department of Labor's Employment and Training Administration. The solution was created by the grantee and does not necessarily reflect the official position of the U.S. Department of Labor. The Department of Labor makes no guarantees, warrantees, or assurances of any kind, express or implied, with respect to such information, including any information on linked sites and including, but not limited to, accuracy of the information or its completeness, timeliness, usefulness, adequacy, continued availability, or ownership.

# MECHATRONICS BLOCK 3 CAPSTONE
# PROGRAMMABLE SYSTEM PROJECT

## OVERVIEW:

Using the skills learned in Block 3 of Lansing Community College's AMTEC Mechatronics program, students will work in a team of 2-3 to safely assemble and program an automated system that utilizes robotics, motor starting (conveyor), pneumatics (stack feeder), sensors, indicator lights and electrical components.

Make sure you have successfully completed all prerequisites, lessons and labs in the following subjects before starting this Capstone:

- Allen Bradley PLC's (103X)
- Robotics (105X)

The instructor will provide the automated task, equipment, wiring schematics, fluid schematics and process flow chart.

The student team will have a specified amount of time to wire, program and troubleshoot the automated system.

## ESTIMATED TIME REQUIREMENTS: 12 hours

## OBJECTIVES:

After completing this project, the student should be able to:

- Demonstrate all safety practices pertaining to this project.
- Use schematics, prints, and test equipment to install automated equipment.
- Use a process flow chart to program an Allen Bradley PLC.
- Use a process flow chart to program a Fanuc robot.
- Work in a team to design, construct, program, and test the automated system.
- Discuss the problems and solutions related to completion of the project.
- Present a report to the instructor or a small panel or educators and employers (optional).

*This workforce product was funded by a grant awarded by the U.S. Department of Labor's Employment and Training Administration. The product was created by the grantee and does not necessarily reflect the official position of the U.S. Department of Labor. The U.S. Department of Labor makes no guarantees, warranties, or assurances of any kind, express or implied, with respect to such information, including any information on linked sites and including, but not limited to, accuracy of the information or its completeness, timeliness, usefulness, adequacy, continued availability, or ownership.*

Location: Center for Manufacturing Excellence (CME)

Equipment/Materials needed:

- Fanuc robot
- Modular Mechatronics kit
- Computer with programming software

**Task:** Construct an automated system that performs the following sequence of operations:

1. A hardwired momentary pushbutton will energize a Master Control Relay. A hardwired momentary pushbutton will de-energize the system.
    - The 120 VAC tray will be mounted horizontally and contain no VDC wiring.
2. A hardwired Amber light will turn on indicating that the MCR is energized.
    - Use a lighted (amber) pushbutton for the MCR start and indicator light.
3. A 24 VDC power supply will be energized if the MCR is energized.
    - The power supply will be mounted on the VAC din rail.
    - A white light will turn on when 24 VDC is present on the control side of the MCR.
4. The +24 VDC will be switched through the MCR in order to power field devices. (Diagram 1)
5. A momentary pushbutton(I:0/0) will start the operation of the system.
6. A green light (O:0/0) will turn on when the system is operating.
7. If a diffuse photo electric (I:0/1) switch senses that a part is present in the stack feeder, a 5/2 valve (O:0/1) with activate a double acting cylinder to push the part onto the conveyor.
8. The conveyor contactor (O:0/5) will start once the cylinder reed switch (I:0/2) senses that the cylinder has fully extended.
9. The stack feeder cylinder will retract.
10. The conveyor will move the part past an inductive proximity (I:0/3) and then a capacitive proximity switch (I:0/4).
11. If the inductive switch is sensed, the conveyor will stop and the robot will be signaled using crosstalk relay CR1 (O:0/2).
12. If the capacitive switch is sensed, the conveyor will stop and the robot will be signaled using crosstalk relay CR2 (O:0/3).
13. The robot will be waiting for CR1-1 (DI0) or CR1-2 (DI1) to perform the necessary jump to pick the part.
14. Metal parts will be picked from the conveyor and will be placed it in a metal parts bin.
15. Non-metal parts will be picked from the conveyor and will be placed in a non-metal parts bin.
16. After the block has been placed in the bin, the robot will signal the PLC using crosstalk relay CR3 (DO0) to CR3-1 (I:0/5) and at which point the stack feeder cycle will start again.
17. The system will run for 5 parts, after which will signal the robot with crosstalk relay CR4 (O:0/4 to DI2) to return to a “safe” position. The system will de-energize, turning off the green light.

*This workforce product was funded by a grant awarded by the U.S. Department of Labor’s Employment and Training Administration. The product was created by the grantee and does not necessarily reflect the official position of the U.S. Department of Labor. The U.S. Department of Labor makes no guarantees, warranties, or assurances of any kind, express or implied, with respect to such information, including any information on linked sites and including, but not limited to, accuracy of the information or its completeness, timeliness, usefulness, adequacy, continued availability, or ownership.*

Diagram 1: Master Control Relay and Electrical Schematic

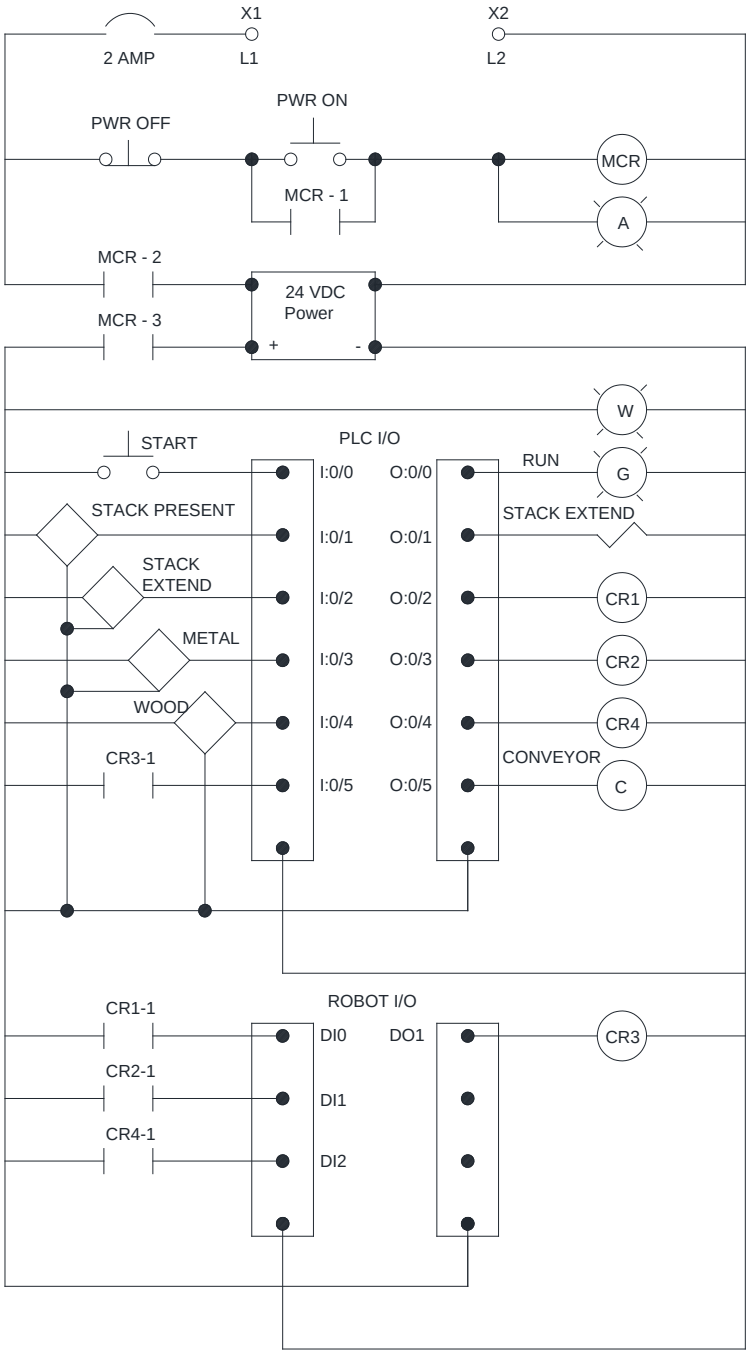

Diagram 2: Pneumatic Diagram

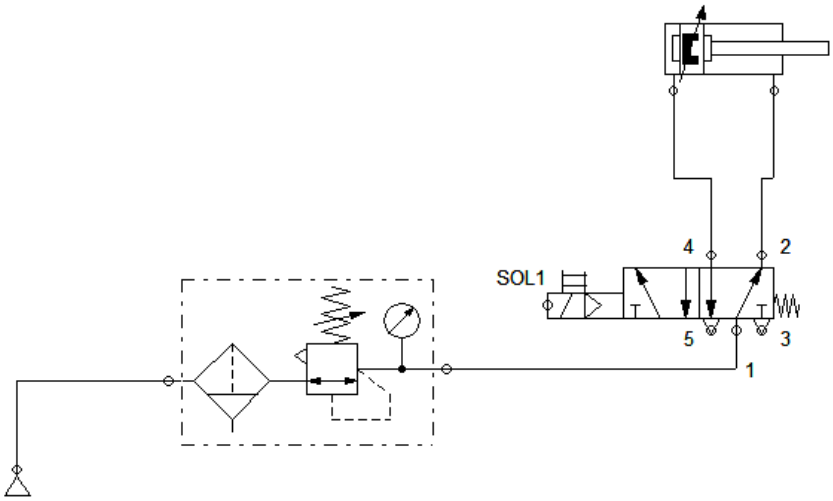

Diagram 3: Equipment Layout:

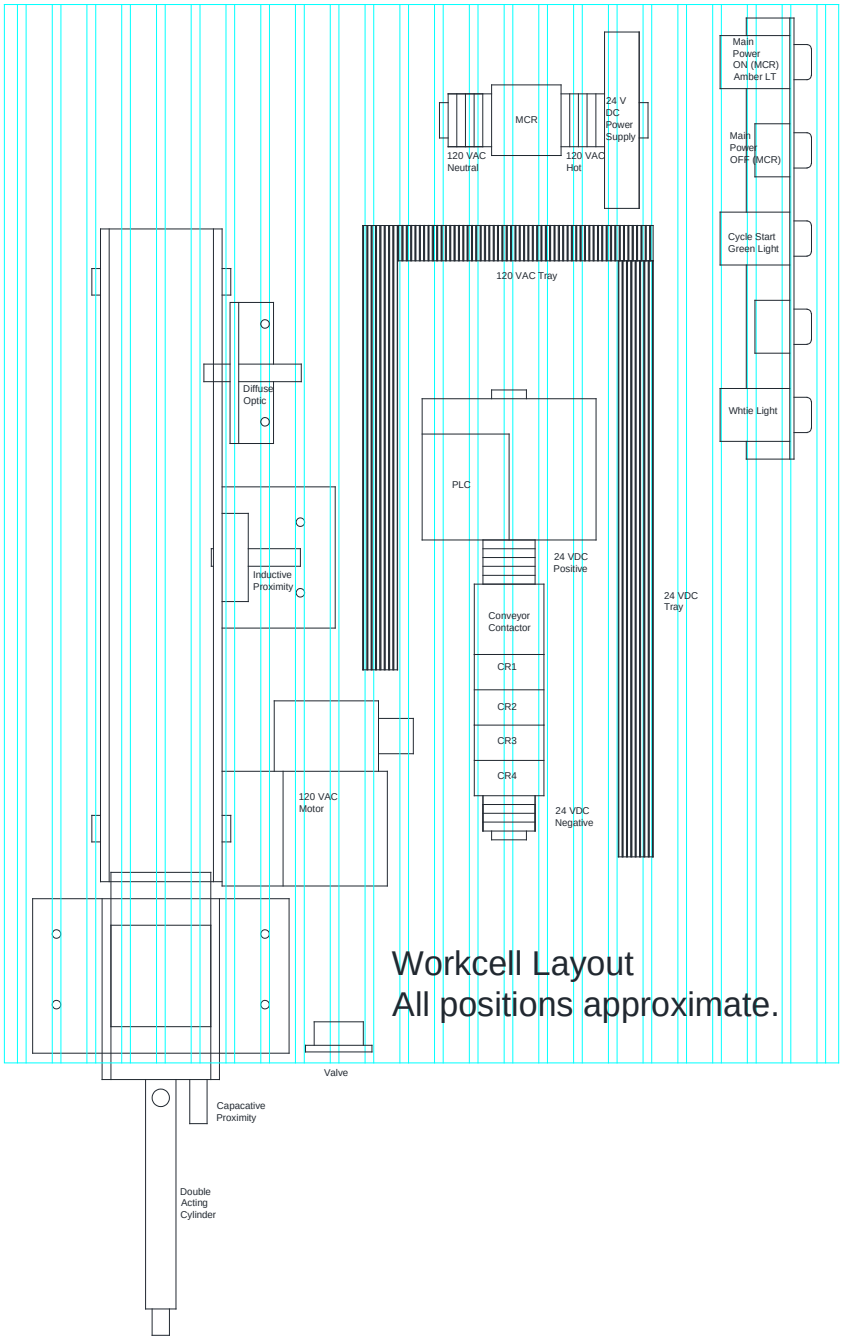

Robot Flow Chart:

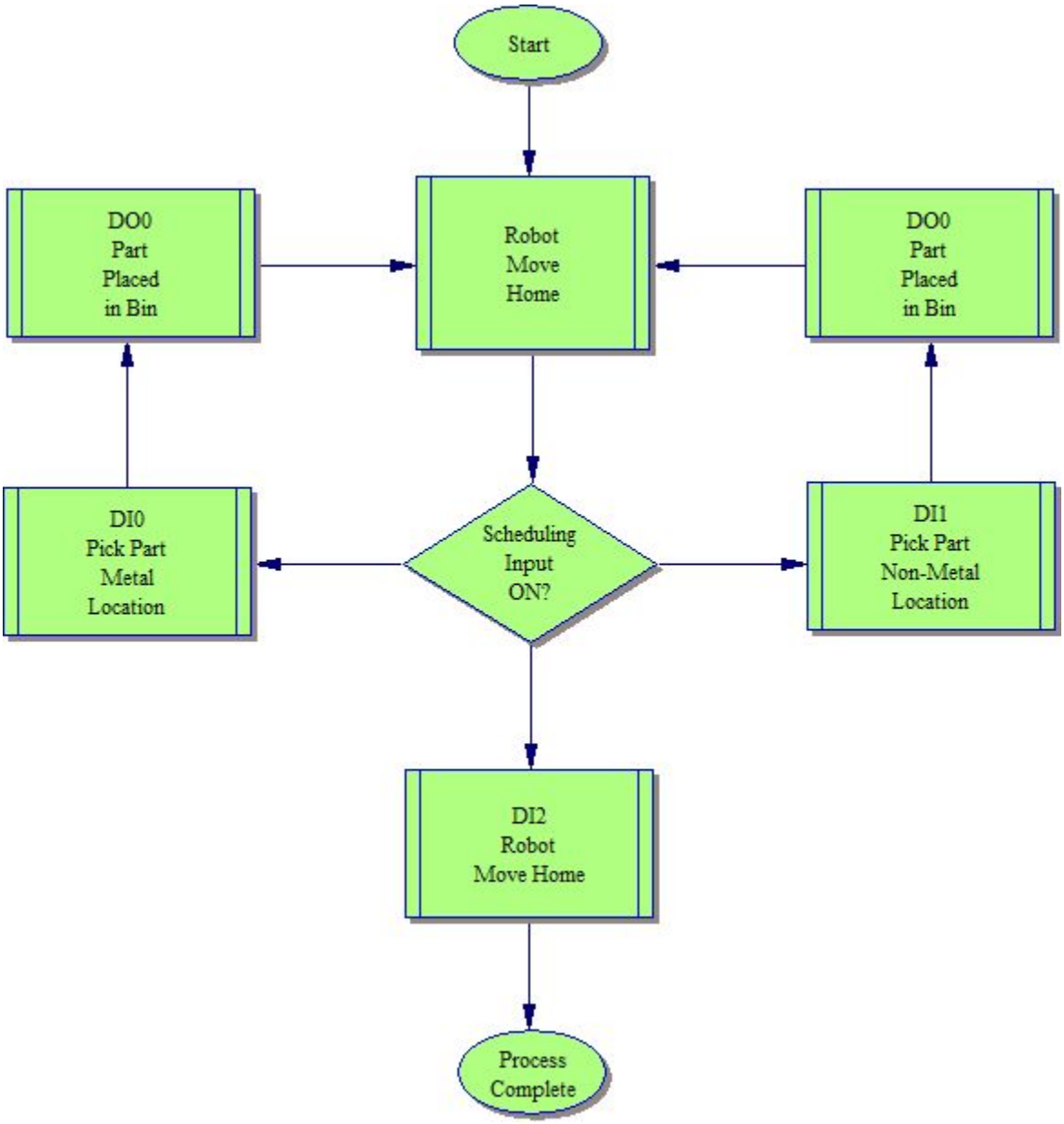

PLC Flow Chart:

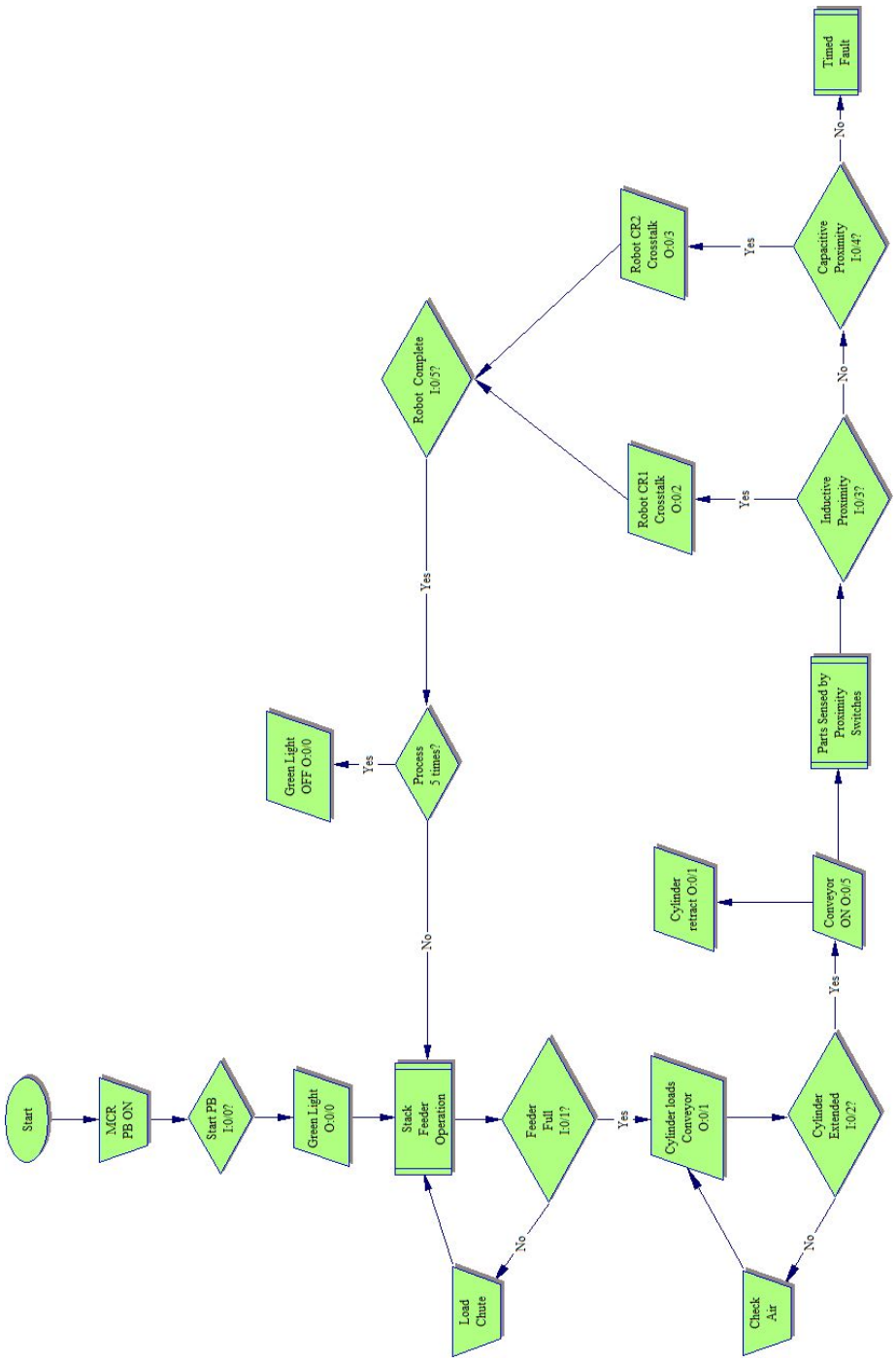

Cell Layout:  Use this for diagram of robot positions:

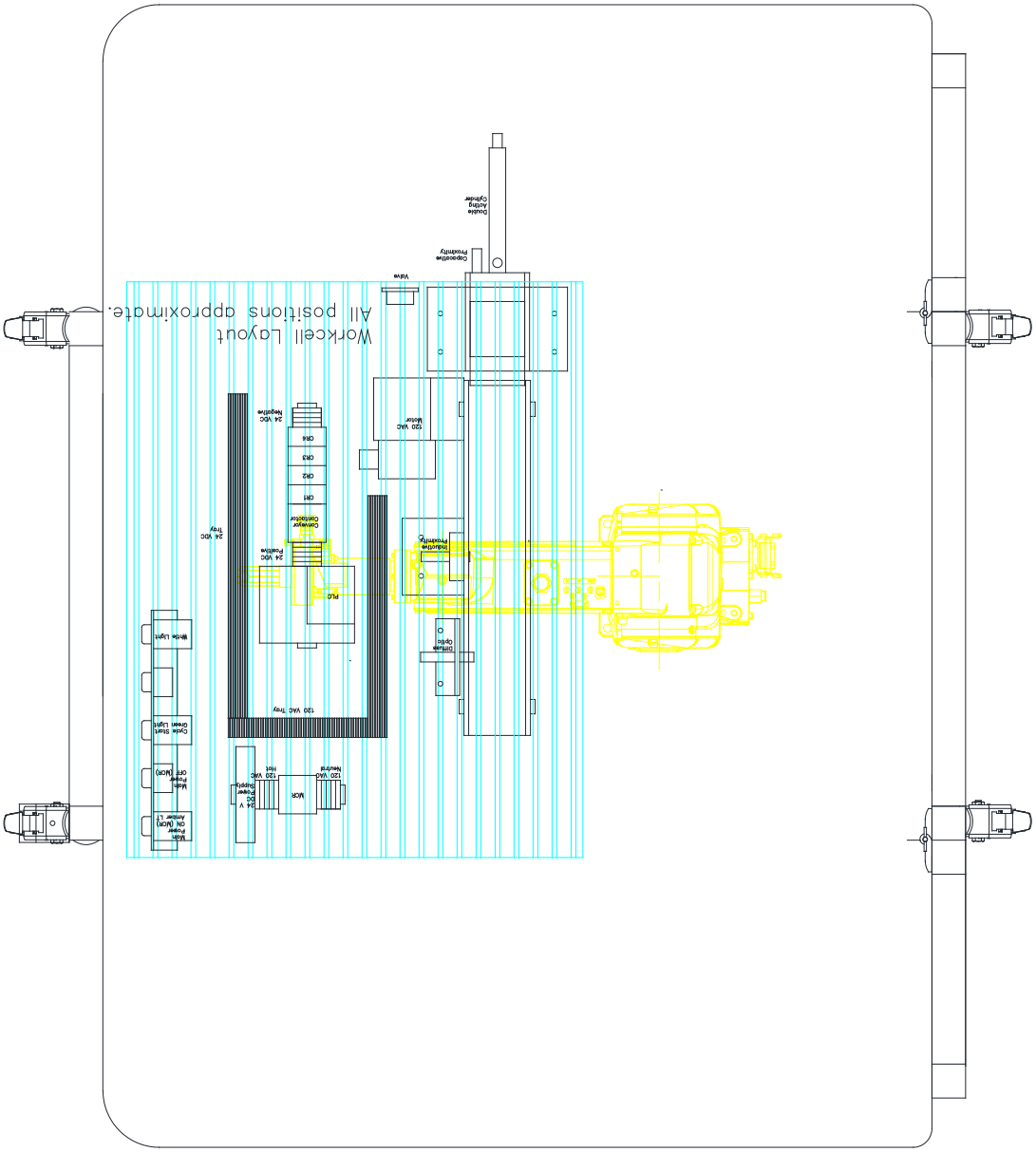

## Grading Rubric (50 pts)

(5 pts) The master control relay will work as designed.

(5 pts) Terminal Strip Assignment

A report document will be produced indicating the different voltage leads, inputs, outputs, daisy chains, etc. with appropriate colors and wire numbers. The terminal strip will also be correctly labeled so that is can be quickly connected to the PLC and robot for testing.

(5 pts) I/O Legends and Tag List

A report document will be produced indicating the I/O and tag assignment for the PLC and robot. Bits, Timers and Counters will be included in different sections of the report so that it is easily understood by the technician installing the system.

(10 pts) PLC Operation

The PLC will correctly schedule the process, count the number of parts being processed and stop operation once the process requirements are met.

(10 pts) Robot Operation

The Fanuc robot program will pick and place the parts correctly and communicate with the PLC in order to accomplish the task.

(5 pts) Workmanship

The system (I/O, peripherals, wiring, etc.) will be well laid out. Wire terminations are labeled and safe. Sensor selection will match the system requirements.

(10 pts) Teamwork

Each team member will have specific tasks. Recommended duties for different members include but may not be limited to:

- Team Leader
- MCR wiring
- PLC Programmer
- Robot Programmer
- Component mounting and wiring

*This workforce product was funded by a grant awarded by the U.S. Department of Labor's Employment and Training Administration. The product was created by the grantee and does not necessarily reflect the official position of the U.S. Department of Labor. The U.S. Department of Labor makes no guarantees, warranties, or assurances of any kind, express or implied, with respect to such information, including any information on linked sites and including, but not limited to, accuracy of the information or its completeness, timeliness, usefulness, adequacy, continued availability, or ownership.*

## Mechatronics Capstone Trainer

Project Items are Bold

| Item | Qty | Describe |
|---|---|---|
| **A** | **1** | **30" X 24" extruded alumunium table** |
| B | 1 | Festo Easy Port PLC |
| **C** | **1** | **Allen Bradley Compact Logix PLC** |
| D | 1 | Siemens S7-1200 PLC |
| **E** | **1** | **Mini conveyor** |
| **F** | **1** | **Large L bracket for conveyor and sensor mounting** |
| **G** | **1** | **Stack Feeder** |
| **H** | **1** | **6" double acting cylinder** |
| I | 1 | 8" spring return cylinder |
| J | 1 | 8" double acting cyliner |
| K | 1 | 12" spring return cylinder |
| **L** | **4** | **1/8" NPT flow control** |
| **M** | **20** | **1/8" NPT quick connect** |
| **N** | **1** | **12 mm diffuse optical sensor** |
| **O** | **1** | **12 mm retro reflective sensor** |
| **P** | **1** | **12 mm inductive proximity sensor** |
| **Q** | **1** | **12 mm capactivie proximity sensor** |
| **R** | **1** | **Pushbutton panel** |
| | **1** | **Orange lighted pushbutton** |
| | **1** | **Green lighted pushbutton** |
| | **1** | **Normally open pushbutton** |
| **S** | **20** | **Din rail mounted cotact blocks** |
| **T** | **3** | **24 VDC 5/2 valve** |
| **V** | **30** | **T slot mounts** |
| W | 4 | 3 hole straight brackets |
| X | 2 | Long L brackets |
| Y | 2 | Short L backets |
| **Z** | **1** | **Triangle sensor mount bracket** |
| **AA** | **1** | **24 VDC solid state relay** |
| **BB** | **1** | **24 VDC contactor** |
| **CC** | **2** | **24 VDC relays** |
| | | |
| DD | 1 | Pushbutton panel |
| | 1 | Toggle Switch |

*This workforce product was funded by a grant awarded by the U.S. Department of Labor's Employment and Training Administration. The product was created by the grantee and does not necessarily reflect the official position of the U.S. Department of Labor. The U.S. Department of Labor makes no guarantees, warranties, or assurances of any kind, express or implied, with respect to such information, including any information on linked sites and including, but not limited to, accuracy of the information or its completeness, timeliness, usefulness, adequacy, continued availability, or ownership.*

| | | |
|---|---|---|
| | 1 | NO / NC pushbutton |
| **EE** | **1** | **24 VDC Power Supply** |
| **FF** | **1** | **Air regulator with shutoff** |
| GG | 1 | 24 VDC 2/2 valve |
| HH | 1 | 24 VDC 3/2 valve |
| **II** | **1** | **2 amp circuit breaker** |
| JJ | 1 | 10 amp circuit breaker |
| **KK** | **2** | **Black blocks** |
| **LL** | **2** | **Metal blocks** |
| **MM** | **1** | **Panduit** |
| **NN** | **1** | **Din rail** |
| OO | 2 | AC contactors |
| PP | 1 | 24 VDC Motor Starter |

*This workforce product was funded by a grant awarded by the U.S. Department of Labor's Employment and Training Administration. The product was created by the grantee and does not necessarily reflect the official position of the U.S. Department of Labor. The U.S. Department of Labor makes no guarantees, warranties, or assurances of any kind, express or implied, with respect to such information, including any information on linked sites and including, but not limited to, accuracy of the information or its completeness, timeliness, usefulness, adequacy, continued availability, or ownership.*

## Project Management Framework.

Each team will divide up the project duties to the members in order to facilitate a timely project completion. Three (3) four-hour sessions (36 man hours) will be alloted for the students to complete the project. The tasks that need to be divided amongst the team members include:

| | | |
|---|---|---|
| Plan project (3 members) | 1 hour | 3 man hrs |
| Mount the components onto the modular trainer (1-2 members) | 2 hour | 4 man hrs |
| Wire the master control relay (1 member) | 2 hour | 2 man hr |
| Wire the PLC componenets and pneumatics (1-2 members) | 2 hours | 4 man hrs |
| Wire the Robot components (1-2 members) | 1 hours | 2 man hrs |
| Write the PLC program (1-2 members) | 6 hours | 6 man hrs |
| Program the robot (1 member) | 3 hours | 3 man hrs |
| Labeling (1 member) | 2 hours | 2 man hrs |
| Create Terminal Strip Assignment and Tag list (1 member) | 1 hour | 1 man hrs |
| Troubleshooting and problem solving (3 members) | 3 hours | 9 man hrs |

## Project Completion

The instructor will sign off the following milestones in order to track the progress of the project:

| | |
|---|---|
| Master Control Relay | Instructor _____ |
| 24 VDC PLC Wiring | Instructor _____ |
| Robot to PLC Crosstalk Wiring and Config | Instructor _____ |
| PLC to Robot Crosstalk Wiring | Instructor _____ |
| 120 VAC Conveyor Control | Instructor _____ |
| Pneumatic Connections | Instructor _____ |
| Final Operation | Instructor _____ |

*This workforce product was funded by a grant awarded by the U.S. Department of Labor's Employment and Training Administration. The product was created by the grantee and does not necessarily reflect the official position of the U.S. Department of Labor. The U.S. Department of Labor makes no guarantees, warranties, or assurances of any kind, express or implied, with respect to such information, including any information on linked sites and including, but not limited to, accuracy of the information or its completeness, timeliness, usefulness, adequacy, continued availability, or ownership.*

| Subject Matter Expert (SME) Course Review Summary |
| --- |
| **College: Lansing Community College** |
| **M-CAM Training Area:** ☐CNC/Machining ☒Multi-Skilled/Mechatronics ☐Production Operation ☐Welding/Fabrication |
| **Degree Program Name:** |
| **Title of Course: Mechatronics Block 3 Capstone** |
| **Subject Matter Expert (SME) Reviewer Information**<br>**Name: Robert C. Hess**<br>**Title: Senior Instructional Designer/Trainer**<br>**Phone: 566-322-1033**<br>**Email: bob.hess@mhtechnologies.net**<br>**Organization/Affiliation: MH Technologies** |
| **Attach Resume or provide credentials (showing years of experience and work experience that is relevant to course content):** |
| **Synopsis of Findings:**<br>1. **Document is good for evaluating student knowledge.** |

Reviewers Signature Robert C. Hess Date: 3/8/17

**Michigan Coalition for Advanced Manufacturing**
**Subject Matter Expert Course Review**

| 1. Course Overview and Objectives | Exceptional | Satisfactory | Ineffective |
|---|---|---|---|
| The goals and purpose of the course is clearly stated. | | X | |
| Prerequisites and/or any required competencies are clearly stated. | | X | |
| Learning objectives are specific and well-defined. | | X | |
| Learning objectives describe outcomes that are measurable. | | X | |
| Outcomes align to occupational focus (industry skills and standards). | | X | |
| Comments or recommendations: | | | |

| 2. Material and Resources | Exceptional | Satisfactory | Ineffective |
|---|---|---|---|
| The instructional materials contribute to the achievement of the course learning objectives. | | X | |
| The materials and resources meet/reflect current industry practices and standards. | | X | |
| The instructional materials provide options for a variety of learning styles. | | X | |
| Resources and materials are cited appropriately. If applicable, license information is provided. | | X | |
| Comments or recommendations: | | | |

| 3. Learning Activities | Exceptional | Satisfactory | Ineffective |
|---|---|---|---|
| Provide opportunities for interaction and active learning. | | X | |
| Help understand fundamental concepts, and build skills useful outside of the learning object. | | X | |
| Activities are linked to current industry practices and standards. | | X | |

| Comments or recommendations: | | | |
|---|---|---|---|
| **4. Assessment Tools/Criteria for Evaluation** | **Exceptional** | **Satisfactory** | **Ineffective** |
| The course evaluation criteria/course grading policy is stated clearly on syllabus. | | X | |
| Measure stated learning objectives and link to industry standards. | | X | |
| Align with course activities and resources. | | X | |
| Include specific criteria for evaluation of student work and participation. | | X | |
| Comments and recommendations: | | | |
| **5. Equipment/Technology** | **Exceptional** | **Satisfactory** | **Ineffective** |
| Meets industry standards and needs. | | X | |
| Supports the course learning objectives. | | X | |
| Provides students with easy access to the technologies required in the course/module. | | X | |
| Comments and recommendations: | | | |

This workforce solution was funded by a grant awarded by the U.S. Department of Labor's Employment and Training Administration. The solution was created by the grantee and does not necessarily reflect the official position of the U.S. Department of Labor. The Department of Labor makes no guarantees, warrantees, or assurances of any kind, express or implied, with respect to such information, including any information on linked sites and including, but not limited to, accuracy of the information or its completeness, timeliness, usefulness, adequacy, continued availability, or ownership.

# Robert C. Hess

**47737 Remer Ave.**
**Shelby Twp., MI 48317**
**586-322-1033**
**bob.hess@mhtechnologies.net**

**Qualifications**
Dedicated, articulate, and enthusiastic with strong analytical and organizational abilities. Effective communication and interpersonal skills. Ability to work independently or as an integral part of a team to accomplish goals. Experience prioritizing and completing numerous concurrent responsibilities while meeting time and organizational goals. Sound professional attitude, strong work ethic and pride in personal performance.

---

**Experience**

**2015 – Present** **M H Technologies LLC** **Warren, MI**
**Senior Instructional Designer/Trainer**

- Perform Needs Analysis and quote training programs
- Develop on-line training programs, system manuals, student workbooks, and job aids
- Deliver on-site training programs

**2002 – 2015** **R.C. Technologies** **Shelby Twp. MI**
**Business Owner – R.C. Technologies**

- Research and quote training programs
- Development of training programs for Ford Motors, DaimlerChrysler, General Motors, Kuka Robotics, Fame Conveyor, Lamb Technicon, Delphi, Magna, and SPX
- Design training programs, system manuals, student workbooks, PowerPoint presentations, and job aids
- Deliver on-site training programs
- Professional Industrial photography

**1995 – 2002** **DCT Inc.** **Sterling Heights, MI**
**Training Designer**

- Research and quote training programs
- Design training programs, system manuals, student workbooks, and job aids
- Deliver on-site training programs

**1990 – 1995** **Bond Robotics** **Sterling Heights, MI**
**Training Manager / Field Service Engineer**

- Managed Training Department
- Research and quote training programs
- Design operation and maintenance manuals plus training guides
- Deliver all training programs
- Perform on-site electrical and mechanical customer support for installation, start-up, and debugging of pressroom automation

**1986 – 1990** **Robotic Vision Systems, Inc.** **Sterling Heights**
**Field Service Engineer / Trainer**

- Research, installation, programming and training of 3D vision guided robotic welding and sealant systems for military, aerospace, and automotive industry

**Education** **1977 – 1981** **Ferris State University** **Big Rapids, MI**

- BSEE